HAL
open science

Four species in one: multigene analyses reveal phylogenetic patterns within Hardwicke's woolly bat, Kerivoula hardwickii-complex (Chiroptera, Vespertilionidae) in Asia

Vuong Tan Tu, Alexandre Hassanin, Neil M. Furey, Nguyen Truong Son, Gabor Csorba

To cite this version:

Vuong Tan Tu, Alexandre Hassanin, Neil M. Furey, Nguyen Truong Son, Gabor Csorba. Four species in one: multigene analyses reveal phylogenetic patterns within Hardwicke's woolly bat, Kerivoula hardwickii-complex (Chiroptera, Vespertilionidae) in Asia. Hystrix, the Italian Journal of Mammalogy, 2018, 29 (1), pp.111-121. 10.4404/hystrix-00017-2017 . hal-01945690

HAL Id: hal-01945690

https://hal.sorbonne-universite.fr/hal-01945690v1

Submitted on 5 Dec 2018

HAL is a multi-disciplinary open access archive for the deposit and dissemination of scientific research documents, whether they are published or not. The documents may come from teaching and research institutions in France or abroad, or from public or private research centers.

L'archive ouverte pluridisciplinaire **HAL**, est destinée au dépôt et à la diffusion de documents scientifiques de niveau recherche, publiés ou non, émanant des établissements d'enseignement et de recherche français ou étrangers, des laboratoires publics ou privés.

Distributed under a Creative Commons Attribution 4.0 International License

Published by Associazione Teriologica Italiana
Hystrix, the Italian Journal of Mammalogy
Volume 29 (1): 111–121, 2018
OPEN ACCESS
Available online at:
http://www.italian-journal-of-mammalogy.it
doi:10.4404/hystrix-00017-2017

Research Article

Four species in one: multigene analyses reveal phylogenetic patterns within Hardwicke's woolly bat, *Kerivoula hardwickii*-complex (Chiroptera, Vespertilionidae) in Asia

Vuong Tan Tu[1,2,3,4,*], Alexandre Hassanin[1,2,*], Neil M. Furey[5], Nguyen Truong Son[3,4], Gábor Csorba[6]

[1] *Institut de Systématique, Evolution, Biodiversité (ISYEB), UMR 7205 MNHN CNRS UPMC, Muséum national d'Histoire naturelle, Case postale N°51–55, rue Buffon, 75005 Paris, France*
[2] *Service de Systématique Moléculaire, UMS 2700, Muséum national d'Histoire naturelle, Case postale N°26–43, rue Cuvier, 75005 Paris, France*
[3] *Institute of Ecology and Biological Resources, Vietnam Academy of Science and Technology, 18 Hoang Quoc Viet road, Cau Giay district, Hanoi, Vietnam*
[4] *Graduate University of Science and Technology, Vietnam Academy of Science and Technology, 18 Hoang Quoc Viet road, Cau Giay district, Hanoi, Vietnam*
[5] *Fauna & Flora International, Cambodia Programme, 19 Street 360, Boeng Keng Kang 1, Chamkarmorn, Phnom Penh, Cambodia*
[6] *Department of Zoology, Hungarian Natural History Museum, Baross u. 13., H-1088, Budapest, Hungary*

Keywords:
Kerivoulinae
Asia
phylogeography
taxonomy
cryptic species

Article history:
Received: 20 October 2017
Accepted: 26 April 2018

Acknowledgements
In Vietnam, we would like to thank Pham Duc Tien (IEBR), Dinh Quoc Thang, and Nguyen Xuan Nghia (Ngoc Linh NR) and Nguyen Thanh Son (Vu Quang NP) for their support during the field surveys. We are grateful to Nguyen Van Sinh, Tran Huy Thai, Truong Xuan Lam, Le Xuan Canh and other colleagues of the IEBR, Hanoi for administrative assistance. The field research was done with permission from the People's Committees of numerous provinces, the Vietnamese Ministry of Agriculture and Rural Development (Vietnam Administration of Forestry), and the directorates of numerous national parks and nature reserves. In Cambodia, we would like to acknowledge Tha Dira Vong, Hul Vibol, In Saraden, for their support during the field surveys, and Christiane Garnero-Morena, Gérard Diffloth, Blaise Kilian, Azedine Beschaouch and Nao Hayashi-Denis for their assistance. The field trips were organized by the UNESCO with permission from the National Authority for Preah Vihear, the President, His Excellency Mr. Chuch Phoeurn and the Director of the Preah Vihear temple, Prof. Hang Soth. We thank Vu Dinh Thong (IEBR, Hanoi), Hoang Trung Thanh (VNU-HUS, Hanoi, Vietnam); Wendy van Bohemen and Steven van der Mije (NBC, Leiden, The Netherlands); and Anne-Marie Ohler, Jean-Marc Pons, and Anne Previato (MNHN, Paris, France), for their kind help and for permitting the authors to study the bat specimens under their care. This research was supported by the "ATM Barcode" funded by the MNHN, the network "*Bibliothèque du Vivant*" funded by the CNRS, the MNHN, the INRA, the CEA (Genoscope), Project no. 106-NN.05-2016.14 funded by the National Foundation for Sciences and Technology Development of Vietnam (NAFOSTED), the SYNTHESYS Project, financed by European Community Research Infrastructure Action under the FP7 "Capacities" Program, the Hungarian Scientific Research Fund (OTKA) K112440, the "Société des Amis du Muséum et du Jardin des Plantes", the Vietnamese Ministry of Education and Training, the French government (through Campus France Agency and "*CROUS de Paris*"), the *Leg Prevost* of MNHN, and the Rufford Foundation (UK).

Abstract

We undertook a comparative phylogeographic study using molecular, morphological and morphometric approaches to address systematic issues in bats of the *Kerivoula hardwickii* complex in Asia. Our phylogenetic reconstructions using DNA sequences of two mitochondrial and seven nuclear genes reveal a distinct clade containing four small-sized species (*K. hardwickii* sensu stricto, *K. depressa*, *K. furva* and *Kerivoula* sp. nov.) previously assigned to *K. hardwickii* sensu lato, as well as *K. kachinensis*, a distinctly larger taxon. Among the four small species, morphological analyses showed that *K. hardwickii* s.str. differs significantly from the other three species in skull shape, whereas *K. depressa*, *K. furva* and the new species appear to be morphologically cryptic species. Molecular dating estimates suggest that species within the *hardwickii*-complex diversified during the Late Pliocene/Early Pleistocene period, most probably in different glacial refugia in Asia. Available evidence indicates that allopatric speciation within the complex included morphological, acoustic, and cytogenetic divergence, although these were not always mutually exclusive. Such adaptive changes would explain how different taxa with overlapping morphological features can share ecological niches and maintain their gene flow in sympatry. Accordingly, we also suggest that two subspecies of *K. hardwickii* sensu lato (*K. h. crypta* and *K. h. malpasi*) originally described as distinct species (from Southern India and Sri Lanka, respectively) can be re-elevated to species rank. Should these be found to be conspecific however, the name *crypta* would have priority and *malpasi* should be treated as its subspecies.

Introduction

Hardwicke's woolly bat, *Kerivoula hardwickii* (Horsfield, 1824) (sensu Corbet and Hill, 1992) is a moderate-sized species within the Kerivoulinae with a forearm length of 30.0–34.0 mm. The species is widely distributed throughout the mainland and on most islands in Southeast Asia (Sumatra, Java, Sulawesi, Borneo, and the Philippines). Isolated populations also exist on Hainan Island, Taiwan, and in Chongqing Province (central China), Fujian Province (southeast China), northwestern India (Jammu and Kashmir), northwestern Pakistan, southern India (Karnataka), and Sri Lanka. Across its range, the species has been found from sea level up to 2,100 m in elevation (Hill, 1965; Simmons, 2005; Rosell-Ambal et al., 2008; Yoshiyuki et al., 2010) (Fig. 1).

Several taxa are traditionally listed as subspecies or synonyms of *K. hardwickii*. These include *K. crypta*, *K. depressa*, *K. engana*, *K. fusca*, and *K. malpasi* (Corbet and Hill, 1992; Simmons, 2005; Rosell-Ambal et al., 2008) and can be divided into two morphological types, one comprising taxa with domed skulls (the nominal subspecies plus *crypta*, *engana*, *fusca*, and *malpasi*) and the other including a single taxon with a characteristically flattened skull (*depressa*). Individuals with domed skulls have been found in South India and Sri Lanka, and following a geographic hiatus of thousands of kilometres, from southern Indochina and southern Thailand, through Peninsular Malaysia to the islands of Southeast Asia (Borneo, Sumatra, Java, Kangean Is, Engano, Sulawesi, and the Philippines). Individuals with flattened skulls have been recorded from Nepal through northeast India, southern China, and Taiwan to southern Thailand, and the range of the two morphological types overlaps (Fig. 1) (Hill, 1965; Corbet and Hill, 1992; Bates and Harrison, 1997).

*Corresponding author
Email addresses: vttu@iebr.ac.vn (Vuong Tan Tu), alexandre.hassanin@mnhn.fr (Alexandre Hassanin)

2018 Associazione Teriologica Italiana
doi:10.4404/hystrix-00017-2017

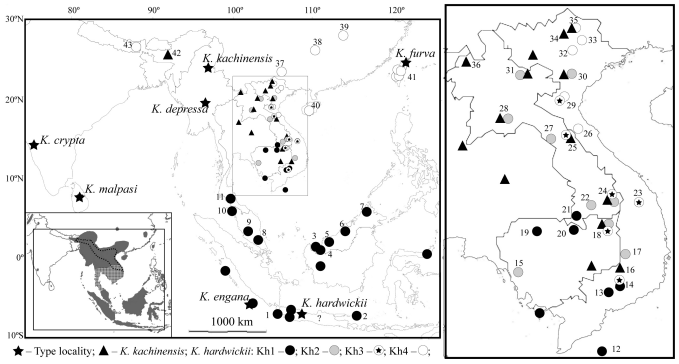

Figure 1 – Study sample sites for five taxa within the *hardwickii*-complex. The inset map in the bottom-left corner indicates the distributions of *K. hardwickii* s.l. (shading) and *K. kachinensis* (dotted line) in Asia (Bates and Francis, 2008; Rosell-Ambal et al., 2008; Yoshiyuki et al., 2010; Ruedi et al., 2012). *K. hardwickii* s.str. and *K. depressa* have overlapping distributions in the southern part of the Indochinese subregion (hatching) (Hill, 1965; Bates and Harrison, 1997; Bates et al., 2007; Douangboubpha et al., 2015). The main maps show localities of samples/specimens of *K. hardwickii* s.l. and *K. kachinensis* included in our genetic or morphological analyses. Collecting localities for specimens sequenced for either COI or Cytb genes were numbered following Tab. S1. The question mark refers to specimens collected without precise locality information from Java in our morphological analyses. Note that the type locality of *K. hardiwickii* is still uncertain (Ceribon, West Java, sensu Tate, 1941).

The systematics of *K. hardwickii* s.l. in Asia has been subjected to several studies in recent years. Bates et al. (2007) suggested that the correct names for a slightly larger taxon with a braincase height (BH) of over 5.1 mm and for a smaller species with a flattened skull (BH<5.1 mm) are *K. hardwickii* and *K. depressa*, respectively. Using mtDNA barcode sequences (COI), Francis et al. (2007, 2010) found five divergent mitochondrial haplogroups in bats tentatively identified as *K. hardwickii*. Khan et al. (2010) also detected high levels of divergence (5.7%) in Cytb sequences between populations of *K. hardwickii* s.l. in Borneo. In Thailand, *K. hardwickii* specimens were divided into two morphotypes (domed-skulls vs. flattened skulls) and COI analyses indicated that specimens in the domed-skull group formed a monophyletic clade, whereas those with flattened skulls resided in two divergent monophyletic clades (Douangboubpha et al., 2015). Likewise, in Vietnam, Son et al. (2015) noted that populations of *K. hardwickii* s.l. formed three morphometrically separable groups.

Most recently, Kuo et al. (2017) found that bats of the *hardwickii*-complex belonged to four distinct clades based on COI sequences (A: central and south Laos, central and southern Vietnam and north Thailand; B: north and south Laos, south Vietnam, north and south Thailand; C: south Laos, south Vietnam, south Thailand, Malaya and Borneo; and D: Taiwan, southeast China and north Myanmar). Specimens of the distinctly larger *K. kachinensis* were nested between these clades. In contrast, phylogenetic reconstructions based on RAG2 sequences supported the monophyly of *K. kachinensis* and of *K. hardwickii* s.l., with no signals indicating separation of the four mtDNA lineages comprising the latter. Morphometric analysis in the same study revealed three groups which included individuals of the A+B, C, and D haplogroups, respectively. Kuo et al. (2017) subsequently concluded that bats in clades A and B represented two mitochondrial lineages of a single taxon assigned to *K. depressa*, that bats in clade C represented *K. hardwickii* s.str., whereas bats in clade D were described as a new species: *K. furva*. However, the authors acknowledged that their morphometric analyses might be biased due to the limited number of specimens examined and that additional genetic makers should be included to test for discordance between their mtDNA and nuDNA phylogenies (Kuo et al., 2017).

Using the broadest geographic coverage and taxon sample to date, we employ molecular (mitochondrial and nuclear markers) and morphological analyses to further investigate phylogenetic relationships within the genus *Kerivoula* and address the following questions: (1) how many species occur within the *K. hardwickii*-complex in Southeast Asia; (2) what are their geographic distributions (3) what levels of intra- and interspecific variation occur in mtDNA and nuDNA sequences; (4) can gene flow (in particular mtDNA introgression) be characterised between the taxa; (5) how and when did the *hardwickii*-complex diversify; and (6) what are the phylogenetic relationships of these species and their affinities with other species within the genus *Kerivoula*?

Materials and methods

Taxonomic sampling

Sixty-seven tissue samples, including 64 *Kerivoula* spp. and three outgroup species were included in our analyses (Tab. S2). Most of these came from recent field expeditions undertaken by the authors. In the field, bats were captured with the use of mist nets (Ecotone, Poland) and four-bank harp-traps and handled in accordance with guidelines approved by the American Society of Mammologists (Sikes et al., 2011). These were measured, photographed and initially identified using Francis (2008). Tissue samples were collected from muscles or patagia and preserved in 95% ethanol in 2 ml Eppendorf tubes. A few samples were taken from older specimens in museum collections. The study specimens are deposited in the following institutions: The Institute of Ecology and Biological Resources (Hanoi, Vietnam), the Hungarian Natural History Museum (Budapest, Hungary), the Centre for Biodiversity Conservation (Phnom Penh, Cambodia), the Muséum national d'Histoire naturelle (Paris, France), and the Naturalis Biodiversity Center (Leiden, Netherlands) (Tab. S2). The three outgroup species were chosen on the basis of previous molecular studies (Hoofer et al., 2003; Khan et al., 2010; Ruedi et al., 2012) and represent three vespertilionid genera from two subfamilies: *Myotis muricola* belongs to Myotinae, *Harpiocephalus harpia*, and *Murina cyclotis* to Murininae.

DNA extraction, amplification, sequencing

Total DNA was extracted using QIAGEN DNeasy Tissue Kit (Qiagen, Hilden, Germany) according to the manufacturer's protocol. Two mitochondrial genes were sequenced for this study: the *COI* barcode fragment and the complete *Cytb* gene. The primers used for PCR amplification of mitochondrial genes were published in Hassanin et al. (2012) and Hassanin (2014).

Seven nuclear genes (six introns and one exon) were sequenced: intron 7 of *FGB* (the nuclear β-fibrinogen gene), intron 6 of *HDAC1* (histone deacetylase 1), intron 10 of *HDAC2* (histone deacetylase 2), intron 6 of *RIOK3* (RIO kinase 3), intron 9 of *TUFM* (elongation factor Tu, mitochondrial precursor), intron 6 of *ZFYVE27* (zinc finger, FYVE domain containing 27), and *RAG2*, a recombination activating gene that encodes a protein involved in the V(D)J recombination. The primers used for PCR amplification of nuclear introns were detailed in Hassanin et al. (2013). The primer set used for amplifying *RAG2* were published in Hassanin et al. (2018).

Amplifications were done in 20 μl using 3 μl of Buffer 10X with $MgCl_2$, 2 μl of dNTP (6.6 mM), 0.12 μl of Taq DNA polymerase (2.5 U, Qiagen, Hilden, Germany) and 0.5–1 μl of the two primers at 10 μM. The standard PCR conditions were as follows: 4 min at 95 °C; 5 cycles of denaturation/annealing/extension with 45 s at 95 °C, 1 min at 60 °C and 1 min at 72 °C, followed by 30 cycles of 30 s at 95 °C, 45 s at 55 °C, and 1 min at 72 °C, followed by 10 min at 72 °C. PCR products were resolved by electrophoresis on a 1.5% agarose gel stained with ethidium bromide and visualized under UV light.

Both strands of PCR products were sequenced using Sanger sequencing on an ABI 3730 automatic sequencer at the Centre National de Séquençage (Genoscope) in Evry (France). The sequences were edited and assembled using Codoncode Alignment Version 3.7.1 (CodonCode Corporation) and Sequencher 5.1 (Gene Codes Corporation). Heterozygous positions (double peaks) were scored using the IUPAC ambiguity codes. Sequences generated for this study were deposited in the EMBL/DDBJ/GenBank database (accession numbers MH137299-MH137612).

Phylogenetic analyses

Our sequences were compared to 129 *COI*, 67 *Cytb*, and 25 *RAG2* sequences of the subfamily *Kerivoulinae* extracted from the nucleotide databases. The origins of all new samples and downloaded sequences are detailed in Tab. S3.

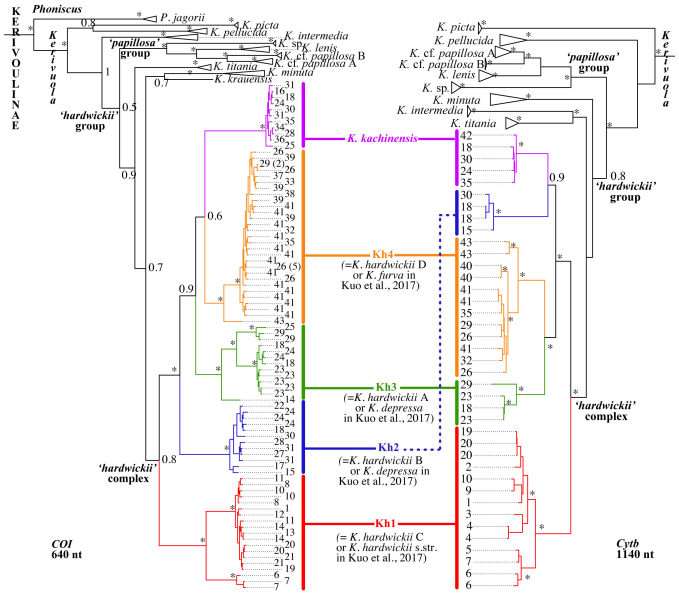

Figure 2 – Bayesian trees from analysis of *COI* (left) and *Cytb* (right) sequences for *Kerivoula hardwickii* complex. The values on the branches indicate posterior probabilities. The asterisk (*) indicates that the node was supported by maximal values of robustness (PP=1). Cartoons with letters indicate partial species of the genus *Kerivoula* including; A, *K. picta*; B, *K. pellucida*; C, *K.* cf. *papillosa* A; D, *K.* cf. *papillosa* B; E, *K. lenis*; F, *Kerivoula* sp.; G, *K. intermedia*; H, *K. titania*; and I, *K. minuta* (see Tab. S2 and S3 for outgroups and haplotypes of partial species). The number at the tip of each branch refers to the collecting locality of studied specimen/sample denoted in Fig. 1 and Tab. S1, S2 and S3.

Sequences were aligned manually on Se–Al v2.0a11 (Rambaut, 2009). No gaps and stop codons were found in the alignments of the mitochondrial *COI* and *Cytb* protein-coding genes. By contrast, a few gaps were included in the alignments of the nuclear introns, but their positions were not found to be ambiguous. The indels (insertion or deletion) shared by at least two taxa in the alignments of each nuclear gene were coded as additional characters and analysed as a separate partition.

The phylogenetic trees were reconstructed from DNA alignments using Bayesian inference (BI) with MrBayes v3.2 (Ronquist et al., 2012). The best-fitting models of sequence evolution were selected under jModelTest (Posada, 2008) for each dataset using the Akaike Information Criterion (AIC).

Phylogenetic analyses were initially performed using four separate datasets: (1) *COI* (173 taxa and 640 bp); (2) *Cytb* (104 taxa and 1140 bp), (3) mtDNA corresponding to the combination of *CO1* and *Cytb* genes (58 taxa and 1845 bp); and (4) *RAG2* (54 taxa and 1068 bp). The selected models under jmodeltest were HKY+I+G for *Cytb* and *RAG2*, and GTR+I+G for *COI* and mtDNA.

A multiple-gene approach was then conducted using a selection of only 31 samples, but eight independent markers, including the mtDNA dataset and seven nuclear genes. These analyses were performed to test possible discordance between the phylogenetic signals extracted from mitochondrial and nuclear genomes. Accordingly, 10 datasets were analysed separately: supermatrix (combining all the nine genes; 8059 bp and 67 indels), nuDNA (combining all the seven nuclear genes; 6214 bp and 67 indels), mtDNA (*COI* + *Cytb*; 1845 bp), *FBG* (1130 bp), *HDAC1* (1090 bp), *HDAC2* (647 bp), *RAG2* (1068 bp), *RIOK3* (647 bp), *TUFM* (894 bp) and *ZFYVE27* (783 bp). The selected models under jmodeltest were HKY for *RIOK3*, HKY+G for *HDAC1* and *TUFM*, HKY+I+G for *RAG2*, GTR+G for *FBG*, *HDAC2* and *ZFYVE27* and GTR+I+G for mtDNA. The indels shared by at least two taxa in the alignments of each nuclear gene were coded as additional characters ("1": insertion; "0": deletion) and analysed as a separate partition. Partitions were used to account for the combination of markers with contrasted molecular properties. The nuDNA dataset was run using the selected model for each of the seven nuclear genes; the mtDNA dataset was run using a GTR+I+G model for each of the three codon positions for the two combined genes; and the supermatrix was run using selected models for each partition. The posterior probabilities (PP) were calculated using four independent Markov chains run for 10,000,000 Metropolis-coupled MCMC generations, with tree sampling every 1000 generations, and a burn-in of 25%.

The results obtained from the separate Bayesian analyses of the eight independent molecular markers (mtDNA and the seven nuclear genes) were analysed using the SuperTRI method (Ropiquet et al., 2009). The lists of bipartitions obtained from the eight Bayesian analyses were transformed into a weighted binary matrix for supertree construction using SuperTRI v.57 (available at http://www.normalesup.org/bli/Programs/programs.html). Each binary character corresponds to a node, which was weighted according to its frequency of occurrence in one of the eight lists of bipartitions. In that way, the SuperTRI method takes into account both principal and secondary signals, because all phylogenetic hypotheses found during the eight separate analyses are represented in the weighted binary matrix used for supertree construction. The reliability of the nodes was assessed using three different measures. The first value is the Supertree Bootstrap Percentage (SBP), which was calculated under PAUP* v.4b10 (Swofford, 2003) after 1000 BP replicates of the weighted binary matrix reconstructed with SuperTRI (1014 characters; heuristic search). The second value is the "Mean Posterior Probability" (MPP) calculated using the lists of bipartitions obtained from Bayesian analyses of the eight data-sets. The third value is the index of reproducibility (Rep), which is the ratio of the number of datasets supporting the node of interest to the total number of datasets. The MPP and Rep values were directly calculated on SuperTRI v.57.

We also applied Bayesian multi-species coalescent analysis in BEAST v.2.1.3 (Bouckaert et al., 2014) to coestimate the shared species tree from seven independent nuclear loci of 31 taxa (Heled and Drummond, 2010). The mtDNA dataset was excluded because the maternal history can be inconsistent with the species tree (e.g. Degnan and Rosenberg, 2002. Substitution models for each nuclear locus were those selected under jModelTest (see above). We ran a MCMC chain of 5x10 million generations, sampled every 1000 generations, with Yule speciation, a strict clock and a burn-in of 10%. Adequacy of chain mixing and MCMC chain convergence were assessed using the ESS values in Tracer v.1.6 (available in the BEAST package). The consensus topology was generated with TreeAnnotator v.1.7.5 (available in the BEAST package) and visualized with FigTree v.1.4.1 (Rambaut, 2009) and DensiTree v2.0 (available in the BEAST package).

Molecular dating

Divergence times were estimated with the Bayesian approach implemented in BEAST v.2.1.3 (Bouckaert et al., 2014) using a *Cytb* alignment of 58 taxa and 1140 bp. As no calibration point (fossil record or biogeographic event) was accurate for Kerivoula, we used a mutation rate of 0.02 per site per lineage per Myr with a lower boundary of 0.01 and an upper boundary of 0.025, which is in agreement with previous studies on bats (e.g., Hulva et al., 2004; Mao et al., 2010). We applied a HKY+I+G model of evolution (based on jModelTest) and a relaxed-clock model with uncorrelated lognormal distribution for substitution rate. Node ages were estimated using a Yule speciation prior and 108 generations, with tree sampling every 1000 generations, and a burn-in of 25%. The outputs of BEAST analyses were checked with ESS values of >200 in Tracer v.1.6. The chronograms were generated and visualized by using TreeAnnotator v.1.7.5 and FigTree v.1.4.1 (Rambaut, 2009), respectively.

Morphological and morphometric analyses

A total of 89 adult specimens of *K. hardwickii* s.l. (n=53), *K. titania* (n=19) and *K. kachinensis* (n=17), with intact skulls were examined using one external (forearm length, FA) and 17 craniodental measurements (Tab. S2). Craniodental measurements were taken to the nearest 0.01 mm using digital callipers under stereomicroscope and included: greatest length of skull (GLS), from the anterior of the 1st upper incisor to the most posteriorly projecting point of the occipital region; condylo-canine length (CCL), from the exoccipital condyle to the most anterior part of the canine; greatest width across the upper

canines from their buccal borders (CC); greatest width across the upper first premolars from their buccal borders (P^2P^2); greatest width across the upper second premolars from their buccal borders (P^3P^3); greatest width across the upper third premolars from their buccal borders (P^4P^4); greatest width across the crowns of the last upper molars from their buccal borders (M^3M^3); greatest width of the skull across the zygomatic arches (ZB); greatest distance across the mastoid region (MB); greatest width of the braincase (BC); braincase height (BH), from the basisphenoid at the level of the hamular processes to the most dorsal part of the skull, including the sagittal crest (if present); maxillary toothrow length (CM^3), from the anterior of the upper canine to the posterior of the crown of the 3rd molar; distance from the anterior of the upper canine to the posterior of the crown of the last premolar (CP^4); mandible length (ML), from the anterior rim of the alveolus of the 1st lower incisor to the most posterior part of the condyle; mandibular toothrow length (CM_3), from the anterior of the lower canine to the posterior of the crown of the 3rd lower molar; distance from the anterior of the lower canine to the posterior of the crown of the last premolar (CP_4); and height of the coronoid process (PCH) from the tip of the coronoid process to the apex of the indentation on the inferior surface of the ramus adjacent to the angular process.

In our study, bats of *K. hardwickii* s. l. were initially assigned to different groups based on molecular data. Specimens without genetic information were classified into molecular groups on the basis of morphological similarity and geographic origin. Because sexual dimorphism in size between bats in each group was not significant (t-test), the morphological affinities of identified taxa were investigated using Principal Component Analyses (PCA) in PAST (Hammer et al., 2001) combining data for both sexes: (1) 10 log-transformed raw measurements and (2) 10 log-transformed standardized raw measurements that removed size variation by regression of raw score on geometric mean (Jungers et al., 1995; Lindenfors et al., 2007; Son et al., 2015). Statistically significant differences in PC scores between different groups were then tested using Kruskal-Wallis one-way analysis of variance (ANOVA, $p \leqslant 0.05$) (Zar, 1999).

Results

Phylogenetic relationships of the genus *Kerivoula* revealed by mtDNA sequences

Bayesian trees reconstructed from the three mtDNA datasets, i.e., *COI* and *Cytb* (Fig. 2) and the concatenation of COI and Cytb sequences, named mtDNA (Fig. S4), highly supported the monophyly of the genus *Kerivoula* (PP=1).

Within *Kerivoula*, *K. picta* and *K. pellucida* occured outside of the clade uniting all other studied species (PP=1 in *COI*/*Cytb*/mtDNA). In this large clade, two major groups were recovered in all analyses, namely: one group named "*papillosa*" uniting *K. papillosa*, *K. lenis*, and a potentially undescribed species of *Kerivoula* from Borneo (see Khan et al., 2010 for details) (PP=1), and another group named "*hardwickii*" including *K. intermedia*, *K. kachinensis*, *K. krauensis*, *K. minuta*, *K. titania*, and *K. hardwickii* sensu lato ($PP_{COI/Cytb/mtDNA}$=0.4/0.8/0.98).

With the major exception of *K. hardwickii* s.l., all species of the hardwickii-group were recovered as monophyletic with maximal support values (Fig. 2). *Kerivoula hardwickii* s.l. was found to be paraphyletic due to the inclusive position of *K. kachinensis* (Fig. 2 and S4). Four lineages of *K. hardwickii* s.l., named Kh1 to Kh4, were supported by maximal PP values in *COI*, *Cytb* and mtDNA analyses and all three datasets supported a basal divergence of *K. hardwickii* Kh1 ($PP_{COI/Cytb/mtDNA}$=0.9/1/1). In contrast, all other relationships were conflicting between *COI*, *Cytb* and mtDNA datasets. For instance, *K. kachinensis* was the sister-group of Kh4 in the *COI* tree (PP=0.6), but was grouped with Kh2 in the Cytb and mtDNA trees (PP=0.9/0.85).

Phylogenetic relationships of the genus *Kerivoula* inferred from *RAG2* sequences

The topology of the Bayesian tree inferred from RAG2 sequences (Fig. S5) is similar to that of the mtDNA trees: the genus *Kerivoula* was recovered as monophyletic with maximal support (PP=1); two

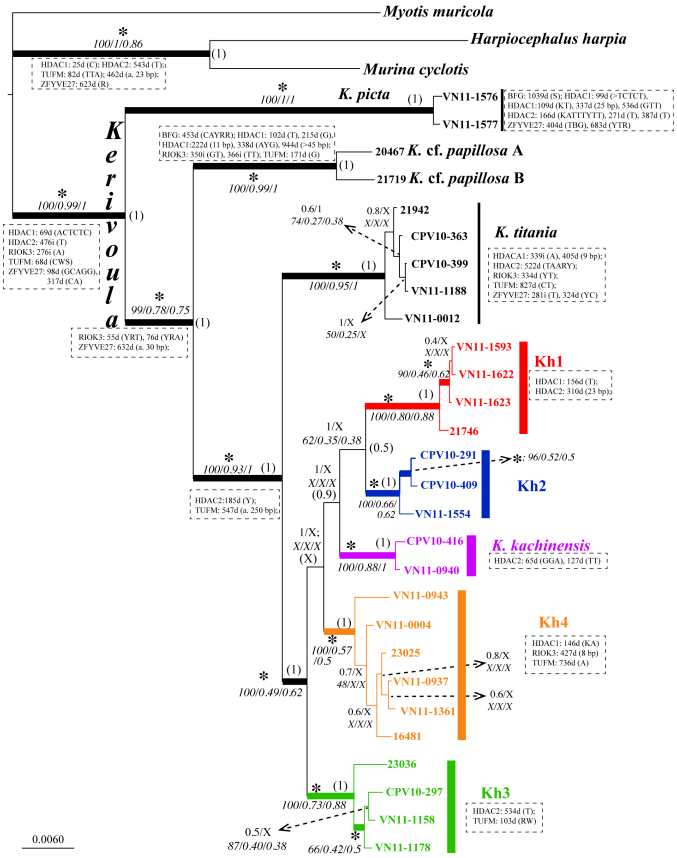

Figure 3 – Bayesian tree reconstructed from the analysis of the seven concatenated independent nuclear genes. For each node, the two values above indicate posterior probabilities calculated either from the concatenation of the seven nuclear genes (PP_{nu} at the left of the slash) or from the supermatrix combining the eight independent markers (see Materials and Method for details) (PP_{sup} at the right of the slash). The asterisk (*) indicates that the node was supported by maximal values of robustness (PP_{nu}=1/PP_{sup}=1). The three values below were obtained from the SuperTRI analyses: from left to right, Supertree Bootstrap percentage (SBP), Mean posterior probability (MPP), and Reproducibility index (Rep). The node labels in parentheses are posterior probabilities found in the consensus species tree generated by *BEAST analyses (detailed in Fig. S9). The letter "X" indicates that the node was not found in the analysis. The position and nature of all diagnostic indels (i: insertion; d: deletion) shared by at least two taxa in the DNA alignments of nuclear genes are presented in the text boxes.

species *K. picta* and *K. pellucida* were divergent from the clade uniting the papillosa-group and the hardwickii-group (PP=1); and, within the hardwickii-group, three species, *K. intermedia*, *K. minuta* and *K. titania* were monophyletic. Although basal relationships within the hardwickii-group were unstable according to mtDNA data, the *RAG2* tree supported the existence of two major clades: one uniting *K. intermedia* and *K. minuta* (PP=1), the other including *K. titania* and an assemblage of *K. hardwickii* s.l. and *K. kachinensis* sequences (PP=0.9). Within the latter assemblage, *K. kachinensis* and the Kh3 lineage of *K. hardwickii* s.l. were monophyletic (PP=1). In contrast, the other three lineages of *K. hardwickii* s.l. were paraphyletic: Kh1 (PP=0.88), Kh2 (PP=1), and Kh4 (PP=0.35).

Multi-gene phylogeny of the genus *Kerivoula*

Multi-locus phylogenetic analyses were performed using 31 samples, including three outgroup species and several specimens characterized by divergent mtDNA haplotypes for the following species or lineages of *Kerivoula*: *K. hardwickii* Kh1 (4 specimens), *K. hardwickii* Kh2 (3 specimens), *K. hardwickii* Kh3 (4 specimens), *K. hardwickii* Kh4 (6 specimens), *K. kachinensis* (2 specimens), *K.* cf. *papillosa* A (1 specimen), *K.* cf. *papillosa* B (1 specimen), *K. picta* (2 specimens), and *K. titania* (5 specimens) (see details in Tab. S2).

With the exception of the interrelationships between *K. kachinensis* and the four lineages of *K. hardwickii* s.l., all of the following phylogenetic relationships were considered as reliable, because they were found in all analyses (mtDNA, nuDNA, BEAST, supermatrix and SuperTRI) and in most separate analyses of the eight independent markers

(mtDNA and 7 nuclear genes) (Rep>0.5; indicated by thick branches in Fig. 3).

1) The monophyly of the genus *Kerivoula* was highly supported (PP=1; SBP=100; MPP=0.99; Rep=1) (Fig. 3, S6 and S7). All specimens of *Kerivoula* were characterized by six diagnostic indels in five different nuclear introns (Fig. 3).

2) All taxa for which at least two individuals were examined were found to be monophyletic: *K. picta*, *K. titania*, *K. kachinensis* and the four lineages (Kh1-Kh4) of *K. hardwickii* s.l. (PP=1; SBP=100; MPP=0.57–1; Rep=0.5–1) (Fig. 3 and S3). Once again, many diagnostic indels were detected in nuclear introns. The indels characterizing the four divergent lineages of *K. hardwickii* s.l. are particularly interesting: two for Kh1, two for Kh3, and three for Kh4 (see Fig. 3 for details).

3) Inter-species relationships within *Kerivoula* highly supported the clade comprising the *papillosa*-group and the *hardwickii*-group (PP=1; SBP=99; MPP=0.78; Rep=0.75). Species within the two groups share two short deletions in the alignment of *RIOK3* (YRT and RA at the positions 55 and 76) and a relatively long deletion of $\tilde{3}0$ nt at the position 632 in the alignment of *ZFYVE27* (Fig. 3 and S6). The monophyly of the *papillosa*-group and the *hardwickii*-group was also highly supported (PP=1; SBP=100; MPP=0.99/0.93; Rep=1). Each group was identified by several indels: species of the *hardwickii*-group share a long deletion of 250 nt at position 547 of *TUFM* and a deletion of Y at position 185 of *HDAC2*.

4) Within the *hardwickii*-group, *K. titania* occupies a basal position with respect to the clade uniting *K. kachinensis* and the four lineages of *K. hardwickii* s.l. (PP=1; SBP=100; MPP=0.49; Rep=0.62).

Conflicting patterns in the phylogenetic trees reconstructed by different independent markers were present within the *K. kachinensis* - *K. hardwickii* s.l. clade. For instance, Kh1 occupies a basal position with mtDNA (PP=1; Fig. S8-A), whereas it is allied to Kh2 with both *RIOK3* (PP=0.98; Fig. S8-F) and *ZFYE27* (PP=1; Fig. S8-H). In addition, Kh1 and Kh2 form a clade with *K. kachinensis* with both *TUFM* (PP=0.93; Fig. S8-G) and *ZFYE27* (PP=0.78; Fig. S8-H), but are related to *K. titania* with *RIOK3* (PP=1; Fig. S8-F). The lineage Kh4 is the sister-group of Kh3 with both mtDNA and *RAG2* (PP=1) (Fig. S8-A and S8-E), but is grouped with Kh2 and *K. kachinensis* with *HDAC1* (PP=1; Fig. S8-D). *K. kachinensis* shares with Kh2 and Kh4 a deletion of 8 nucleotides (AACCCTTA) in position 583 of *HDAC1*, whereas *K. titania* shares with Kh1 a deletion of 2 nucleotides (TC) in position 351 of *HDAC2*. Because independent genes contain conflicting signals, multigene analyses also showed topological discrepancies between phylogenetic trees reconstructed by different methods and datasets. Among these, the alternate position of Kh1 was the most obvious in occupying a basal position of the clade within the supermatrix (PP=1) that is reflexing the dominant signal of mtDNA loci (Fig. S6); whereas it is more closely related to Kh2, and then to *K. kachinensis* in the analyses of the nuDNA dataset (Fig. 3 and S9) and in the SuperTRI analyses (Fig. S7).

Comparison of genetic distances

To avoid erroneous interpretations, uncorrected pairwise "p" distances were calculated between the 26 samples characterized by full DNA sequences for all markers in PAUP* v.4b10 (Swofford, 2003). We analysed two alignments: the combination of mtDNA genes, *COI* and *Cytb* (1845 bp) and the concatenation of seven nuDNA genes (6214 bp). Comparisons between mtDNA and nuDNA distances are shown in Fig. 4 (raw data are provided in Tab. S10). Our results indicate that nuDNA distances can be ranked into five categories that correspond to different taxonomic levels: (1) intraspecific differences (excluding comparisons between the four lineages of *K. hardwickii*): <0.60%; (2) interspecific differences between closely related species of the *hardwickii*-group or the *papillosa*-group: 0.77–2.09% (considering Kh1-Kh4 as different at species level); (3) differences between the *hardwickii*-group and the *papillosa*-group: 3.06–3.76%; (4) differences between *K. picta* and the "*papillosa*/*hardwickii*" groups: 4.79–5.43%; and (5) between the subfamilies Myotinae, Murininae and Kerivoulinae: 5.86–7.62%.

The mtDNA distances can be ranked to four categories only. The three first correspond to nuDNA categories: (1) intraspecific (excluding comparisons between the four lineages of *K. hardwickii*): <0.54%; (2) interspecific, between closely related species of the hardwickii or papillosa groups: 8.13–13.4% (considering Kh1-Kh4 as different at species level); and (3) between *hardwickii*-group and *papillosa*-group:13.65–15.13%. The fourth category includes distances between *K. picta* and "*hardwickii*"/"*papillosa*" groups (15.63–18.70%), and the subfamilies Myotinae, Murininae and Kerivoulinae (17.24–20.10%).

Molecular dating

Our molecular dating estimations based on a *Cytb* alignment (Fig. S11) suggest that *K. kachinensis* and the four lineages of *K. hardwickii* diverged from each other during the Late Pliocene/Early Pleistocene period, between 4.03 and 2.72 Mya.

Morphological analysis

Kerivoula hardwickii s.l. is readily distinguishable morphologically from those of *K. kachinensis* and *K. titania* by its smaller skull size (Fig. 5 and Tab. S12). Within *K. hardwickii* s.l., PCAs carried out on raw and standardized raw data including both sexes (Fig. 6 and Tab. S13) revealed limited evidence of grouping in the four identified taxa, Kh1-Kh4. Of the two clusters formed, one included specimens of Kh1 and *K. h. engana* and the other comprised individuals of Kh2-Kh4 and *K. h. depressa*, where the BH and PCH values had the highest loadings (Tab. S13).

Discussion

How many species exist in the hardwickii-complex?

There are considerable discrepancies between studies identifying numbers of cryptic species in the hardwickii-complex and their phylogenetic relationships with other taxa, particularly *K. kachinensis*. Using DNA barcodes, Francis et al. (2007) showed that specimens currently referred to as *K. hardwickii* fell into three unrelated clusters with nucleotide divergences comparable to those calculated among species. Two were related to *K. kachinensis* and the third was linked to *K. papillosa*. More recently, Francis et al. (2010) identified five divergent *COI* haplogroups within *K. hardwickii*. Four were related to *K. kachinensis*, whereas the position of the fifth, containing only one specimen, was uncertain. Likewise, the phylogenetic tree reconstructed from *COI* sequences by Douangboubpha et al. (2015) showed that bats of *K. hardwickii* fall into three distinct haplogroups, two characterized by "flattened skulls" and one by "domed skulls", whereas *K. kachinensis* appeared as sister to *K. papillosa*. Most recently, based on combined data from genetic (*COI* and *RAG2* genes) and morphological analyses, Kuo et al. (2017) concluded that the *hardwickii*-group includes *K. hardwickii* s.l., *K. krauensis*, and *K. kachinensis*, and divided *K. hardwickii* s.l. into *K. hardwickii* s.str., *K. furva* and *K. depressa*, although the latter species contained two divergent clades in a *COI* gene tree.

The results of our phylogenetic analyses of mtDNA genes (*COI* and *Cytb*) and *RAG2* marker are comparable with those reported by Kuo et al. (2017) (Fig. 2, Tab. S4 and S5). However, our analyses of additional nuclear markers confirm the monophyly of bats of *K. kachinensis* and four lineages of *K. hardwickii* s.l. (Kh1-Kh4) (PP=1; Fig. 3 and S6). All these lineages are supported by high SuperTRI values (SBP=100; 0.57<MPP<0.88; 0.5<Rep<1) and by separate analyses of several independent nuclear genes i.e., *FBG*, *TUFM*, and *ZFYVE27* (Fig. S8). Nucleotide distances estimated with either mtDNA or nuDNA alignments between the four lineages of *K. hardwickii* s.l. (Kh1, Kh2, Kh3 and Kh4) are comparable with interspecific divergences between nominal species in the genus *Kerivoula* (7.9%<*COI*<14.5%; 8.4%<*Cytb*<13%; 1%<nuDNA<1.9%; Fig. 4 and Tab. S10) or other bat groups (i.e. fruit bats of the tribes Scotonycterini, Hassanin et al., 2015, or bamboo bats of the *Tylonycteris robustula* complex, Tu et al., 2017, suggesting they represent different species.

Contrary to the genetic evidence, our morphological analyses only supported separation of *K. kachinensis* and Kh1 from three other taxa (Kh2-Kh4) (Fig. 5 and 6 and Tab. S12). However, many investigations

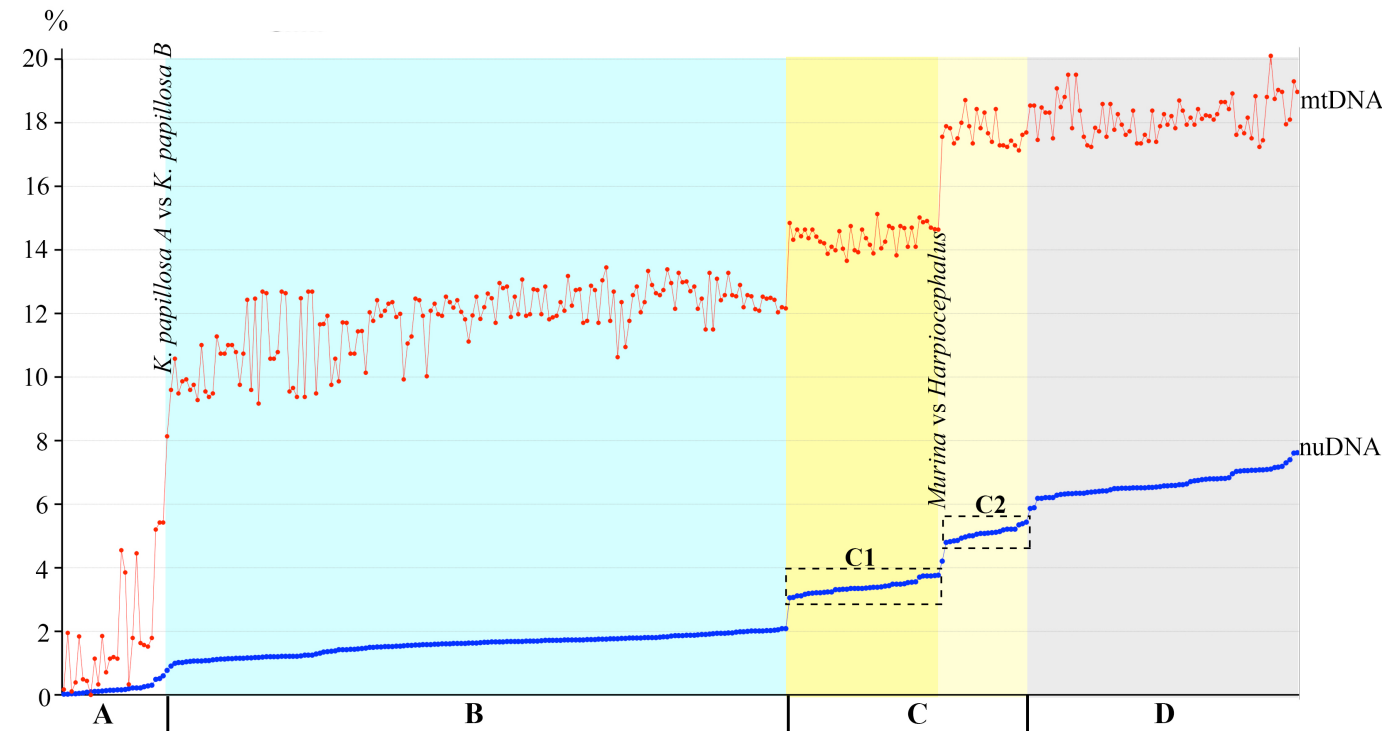

Figure 4 – Comparisons of pairwise nucleotide distances between mitochondrial and nuclear datasets. The p-distances were calculated from two alignments of 26 taxa, corresponding to the combination of mtDNA genes, *COI* and *Cytb* (1845 nt, in red) and the concatenation of seven nuDNA genes (6214, in blue): A – Intraspecific distances (excluding comparisons between the four lineages of *K. hardwickii* s.l.); B – Interspecific distances within the "*hardwickii*" and "*papillosa*" groups ; C – Distances between two genera of the subfamily Murininae, and between species groups of the genus *Kerivoula* (CI – between "*hardwickii*" and "*papillosa*" groups, and C2 – between "*picta*" and "*hardwickii*"/"*papillosa*" groups); D – Distances between the subfamilies Myotinae, Murininae, and Kerivoulinae.

have demonstrated that the speciation of closely related species, including Asian bats, is not always accompanied by morphological change (Bickford et al., 2007; Tu et al., 2015, 2017). We therefore conclude that the *K. hardwickii*-complex comprises *K. kachinensis* and four distinct species (Kh1-Kh4), the latter being previously referred to collectively as *K. hardwickii* s.l., three of which are morphologically cryptic.

Current geographic distribution and habitat preferences of the five species within the hardwickii-complex

Kerivoula hardwickii s.l. was previously assumed to have a very wide geographic range but because our results indicate that the taxon contains four distinct species, it is necessary to determine their respective geographical ranges and environmental characteristics. According to our data, Kh1 and Kh4 are allopatric and separated around the 16th parallel north, with Kh4 encompassing a large area from Nepal to Taiwan, through northern Vietnam and southern China (Fig. 1). Kh2 and Kh3 occur in sympatry over most of their distribution along the Annamite Range, but the former has a wider range in Indochina. Within the Annamite Range, both are found in sympatry with Kh4 in the northern parts, whereas they co-occur with Kh1 in the southern areas (Fig. 1).

With the exception of Kh4 (= *K. furva*, see below), which is quite well studied in Taiwan (Chiang et al., 2006; Chang et al., 2010; Liao, 2013), almost nothing is known about the ecology of species within the *hardwickii*-complex, except that they are forest dwellers and usually occur in sympatry with other *Kerivoula* spp. (Kingston et al., 1999; Bates et al., 2007; Hassanin and Tu, 2010; Son et al., 2015). Francis (2008) indicated that *K. hardwickii* (in a broad sense) roosts in hollow trees or dead leaves in understory of various forest types ranging from lowland evergreen, deciduous or agricultural habitats to montane evergreen forests. However, given that *K. hardwickii* s.l. is a species complex, constituent taxa would be expected to show specialized ecological requirements or behaviours, as typically found between co-occurring sibling bat species (Kingston et al., 2001; Zhang et al., 2005; Soisook et al., 2008; Sun et al., 2008). Previous studies have shown that differences in habitat use, echolocation calls and diet partitioning of insectivorous bats can be explained by skull morphology (Freeman et al., 1981; Barlow et al., 1997; Bogdanowicz et al., 1999). Knowing this, interspecific variation in craniodental characters between Kh1 and Kh2-Kh4 in the complex suggests these may select different habitats and prey, although further investigation is needed to understand how the latter bats can share habitat and food sources by reducing interspecific competition, particularly in areas where several species occur in sympatry (Fig. 1).

Taxonomy of the hardwickii-complex

Within the *hardwickii*-complex, *K. kachinensis* is easily distinguishable from other species by its distinct morphology e.g. FA (mm): 41.85±1.09 vs ⩽34.3; GLS (mm): 16.79±0.44 vs ⩽14.28) (Fig. 5 and Tab. S12). However, the lack of genetic information for the holotype of *K. hardwickii* (which has a badly damaged braincase) makes evaluation of affinities among the Kh1-Kh4 clades challenging.

Based on our combined molecular and morphological evidence and distributional data, *K. h. engana* can be identified as the same taxon as Kh1 in this study. These bats are characterized by the "domed skull" typical of *K. hardwickii* (sensu Bates et al., 2007) which separates this taxon from its "flattened skull" congeners Kh2, Kh3 and Kh4 (or *K. depressa* Miller, 1906b sensu Bates et al., 2007) that occur in mainland Southeast Asia (Fig. 1, 5 and 6). Thus we suggest that, in line with the results of (Kuo et al., 2017), our Kh1 haplotype bats represent the genuine *K. hardwickii* with *K. engana* as its synonym.

Previous studies (Hill, 1965; Corbet and Hill, 1992; Bates and Harrison, 1997; Kuo et al., 2017) regarded two additional taxa (*K. crypta* and *K. malpasi*) as synonyms of *K. hardwickii* due to similarities in certain external and craniodental measurements but did not consider variation in other morphological features (i.e. pelage colour, ear structure) (see Wroughton and Ryley, 1913; Phillips, 1932). Both *K. crypta* and *K. malpasi*, described from southern India and Sri Lanka, respectively, are characterised by high BH values and are isolated from other populations of *K. hardwickii* s.l. in northern India and Southeast Asia by long distances (Fig. 1). Similar to Douangboubpha et al. (2015), who found that the range of "domed skull" bats within the *hardwickii*-complex in Thailand is restricted to the southern part of the country, our study shows that the occurrence of "domed skull" bats in northern Indochina is unlikely. Further studies including specimens from south-

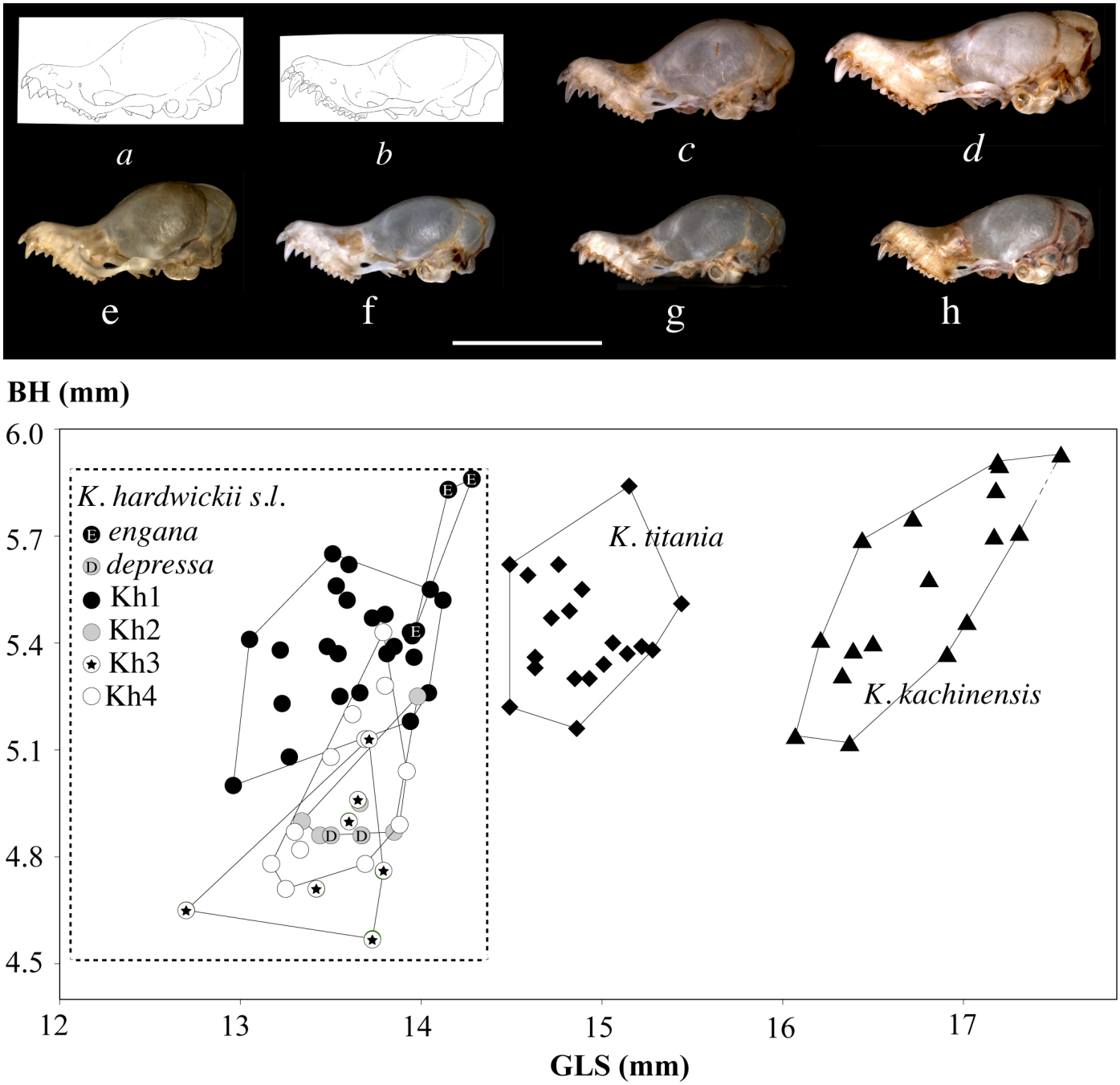

Figure 5 – Lateral view of skulls and plot of greatest length of skull against braincase height for study *Kerivoula* spp. a – *Kerivoula h. engana* (holotype, ♂); b – *K. depressa* (holotype, ♀); c – *K. titania* (♀); d – *K. kachinensis* (♀); e – Kh1 (=*K. hardwickii* s. str., ♀); f – Kh2 (=*K. depressa,* ♀); g – Kh3 (=*K. dongduongana* sp. nov., holotype, ♀); and h – Kh4 (=*K. furva,* ♀). Scale bar=10 mm.

ern Myanmar and other regions of the Indian Subcontinent are evidently required to test for recent gene flow among *K. hardwickii* s.str. and *K. crypta*/*K. malpasi*. On biogeographical grounds, the latter taxa could be regarded as separate species but should these be found to be conspecific, the name *crypta* would have priority and *malpasi* should be treated as its subspecies.

Regarding the taxonomy and nomenclature of the three cryptic "flattened skull" species within the *hardwickii*-complex, our Kh2 and Kh3 clades correspond to clades A and B of Kuo et al. (2017), which were assigned to *K. depressa*, whereas those of Kh4 represent *K. furva*. Although Kuo et al. (2017) discriminated *K. furva* from *K. depressa* morphologically, our morphological comparisons showed significant overlap between Vietnamese specimens of *K. furva*, Kh2 and Kh3 bats, and the type specimens of *K. depressa*. The discrepancy between our study and Kuo et al. (2017) in distinguishing taxa within the complex can be explained by the different datasets used (e.g. Kuo et al., 2017 did not include Vietnamese specimens of *K. furva*) or by the inherent difficulty in separating morphologically cryptic taxa (e.g., Tu et al., 2017).

Although Kuo et al. (2017) found *K. furva* from Northeast India to Taiwan with the southern limit in Guangxi (China) and Kachin (Myanmar), our data indicate that the southern and western distributional limits for the taxon can be drawn around the 18°N parallel in northern Vietnam and in eastern Nepal, respectively. However, there are no records of *K. furva* or Kh3 bats between the Karin Hills and northern Vietnam, and this region is occupied exclusively by bats within the Kh2 clade (Fig. 1). Although further investigations are needed to confirm this pattern, our results and biogeographic considerations corroborate the validity of the recently described *K. furva* and suggest that bats within the Kh2 clade can be assigned to *K. depressa*. As a consequence, bats within the Kh3 clade belong to a previously unnamed species which is formally described below.

Systematic description

Kerivoula dongduongana sp.n. (as Kh3 in Fig. 5, 6 and 7)

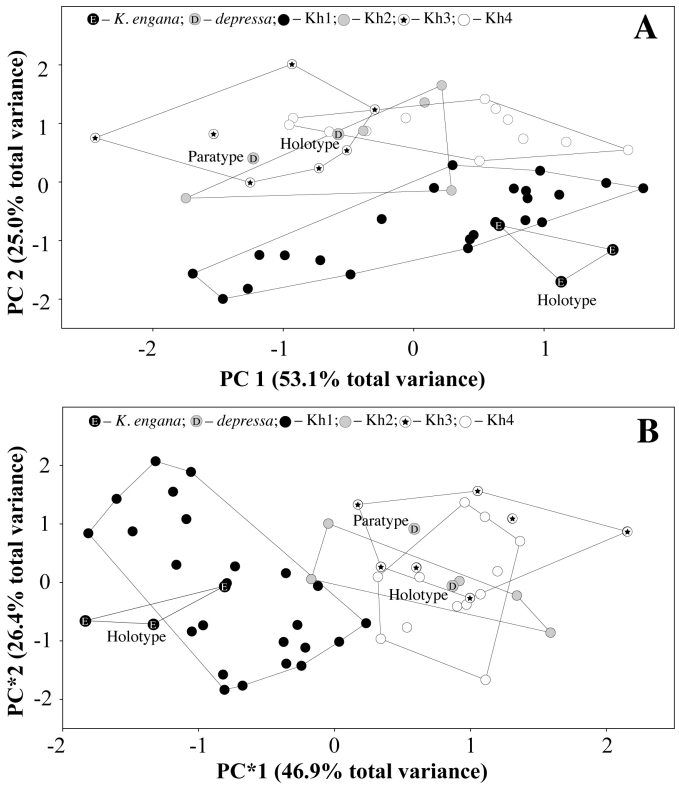

Figure 6 – Principal components analysis (PCA) on 10 craniodental characters of examined *K. harwickii* s.l. specimens. A and B – Plot of PC1 against PC2 obtained from PCAs of the log-transformed raw measurements and log-transformed standardized raw measurements, respectively.

Holotype: MNHN (CG) 2017-2723 (Field number: VN11-1521, tissue code: VN11-1158), adult ♀, body in alcohol, skull removed, collected by A.H. and V.T.T. on 28 November 2011.

Description of holotype: Mass: 4.5 g. Measurements (in mm) are as follows: FA: 33.0; Tail: 38.0; Tibia: 18; GLS: 13.79; CCL: 12.76; CC: 3.33; M3M3: 5.10; ZB: 8.25; MB: 7.56; BW: 7.2; BH: 4.76; CM3: 5.45; ML: 9.78; CM3: 5.76, and PCH: 2.92. Its DNA sequences have been deposited in the EMBL/GenBank/DDBJ nucleotide databases with accession numbers shown in Tab. S2.

Type locality: Ngoc Linh Nature Reserve, Kon Tum province, Vietnam (15°4.766′N, 107°49.833′E; 1117 m a.s.l.).

Paratypes: IEBR-VN11-1178 (=MNHN (CG) 2017-2724) (Field n: VN11-1501; adult ♀), body in ethanol, skulls extracted; collected in Ngoc Linh Nature Reserve (15°4.149′N, 107°49.822′E; 1533 m a.s.l); MNHN (CG) 2017-2725 (Field n: CPV10-292, adult, ♂), MNHN (CG) 2017-2726 (Field n: CPV10-295, adult, ♂), MNHN (CG) 2017-2727 (Field n: CPV10-297, adult, ♀), body in ethanol, skull removed, collected in Virachey National Park, Ratanakiri, Cambodia; HNHM 2012.30.17 (adult, ♂, Tissue code: 23028), and HNHM 2012.30.23 (adult, ♂, tissue code: 23036), body in ethanol, skull removed, collected in Pu Huong Nature Reserve, Nghe An, Vietnam.

Referred specimens: All specimens identified as belonging to clade Kh3 from Vietnam and Laos (Tab. S3) are referred to the new species.

Etymology: Named to denote its restricted distribution range in the Annamite Mountains of Cambodia, Laos and Vietnam. These three countries were formerly known as Indochina (= "Đông Dương" [pronounced as |ˈdoŏngˈ zuːəʊŋ|] in Vietnamese). We propose "Indochina's woolly bat" as the English name, "chauve-souris laineuse d'Indochine" as the French name, and "Dơi lông xù Đông Dương" as the Vietnamese name.

Description: This is a moderate-sized Kerivoula species with a FA of 32.00±1.73 mm. Ears are small and rounded and the posterior margin of the ear has a deep, smoothly concave emargination just below the apex. The pelage is characterized by long and woolly hairs which are buff brown to dark brown. Dorsal hairs are dark gray. Ventral hairs are paler and grayish. Wing membranes are dark brown and translucent (Fig. 7).

The skull is small with a GLS of 13.51±0.38 mm, lightly built and relatively domed. The lateral profile of the skull is flattened from the rostrum to the forehead compared with *K. hardwickii* s.tr. (Kh1 or *K. h. engana* in Fig. 5 and 6). The rostrum is short. The second upper incisor (I3) is situated posterior to the first (I2). I3 is one third to half of I2 in height. I2 is one half the height of the upper canine. The maxillary toothrows are convergent anteriorly. The width and crown area of anterior and posterior premolars (P2P2 and P4P4) exceed than those of P3P3. The width and crown area of upper molars are relatively similar in size (Fig. 7).

Comparisons with other taxa: As a moderate-sized *Kerivoula*, *K. dongduongana* sp. n. differs morphologically from both its larger (*K. flora*, *K. papillosa*, *K. lenis*, *K. titania* and *K. kachinensis*) and smaller (*K. intermedia*, *K. minuta*, and *K. whiteheadi*) congeners. The new species differs from *K. pellucida* in various characters i.e, pelage, degree of wing transparency and craniodental characters (Hill, 1965; Hill and Rozedaal, 1989; Francis, 2008) and from *K. krauensis* by both pelage and craniodental characters (Francis et al., 2007). In relation to similar-sized species within the *hardwickii*-complex, the new species can be differentiated from *K. hardwickii* s.tr. by its skull shape, although it ovelaps morphologically with *K. depressa* and *K. furva* (Fig. 5 and 6, Tab. S12). Genetically, *K. dongduongana* sp.n. differs from other species in the Kerivoulinae by more than 8% in *COI* and 8.4% in *Cytb* sequences, and in particular, by two specific deletions in nuDNA genes (deletion of a T at position 534 of *HDAC2*; deletion of "RW" at position 103 of *TUFM*).

Distribution: Currently, *K. dongduongana* sp.n. is known only from the Annamite Mountains of former Indochina (Fig. 1).

How has speciation occurred in the *hardwickii*-complex?

Relationships among the five species of the *hardwickii*-complex remain problematic, because we found robust conflicting signals (PP⩾0.98) between independent markers. For instance, Kh2 (=*K. depressa*) is related to either Kh1 (=*K. hardwickii* s.str.) (node supported by *RIOK3* and *ZFYVE27*) or *K. kachinensis* (node supported by *HDAC1*), whereas Kh4 (=*K. furva*) is related to Kh3 (=*K. dongduongana* sp.n.) (node supported by mtDNA and *RAG2*) or Kh2 (=*K. depressa*) and *K. kachinensis* (node supported by *HDAC1*). Topological conflicts between gene trees can usually be explained by the retention of ancestral polymorphism due to incomplete lineage sorting or genetic introgression (Pamilo and Nei, 1988; Funk and Omland, 2003). All five species within the *hardwickii*-complex are monophyletic with most markers (Fig. S8), suggesting that lineage sorting may be complete between taxa. This inference agrees with our estimation of their species divergence that took place during late Pliocene and early Pleistocene epochs (4.03–2.72 Mya) (Fig. S11). Regarding the genetic introgression hypothesis, several lines of evidence that support ancient event(s) of introgressive hybridization contributed to the pattern we obtained, whereas recent gene flow between extant taxa in the complex can be ruled out. For instance, as a consequence of their old divergent event(s), species within the complex may have evolved reproductive barriers that prevent recent gene flow between these. Support for this comes from the fact that significant differences in morphology (i.e. body size) between *K. kachinensis* and the four smaller sized species (*K. hardwickii* s.stri., *K. depressa*, *K. furva*, and *K. dongduongana* sp.n.) might represent boundaries preventing copulation and causing mortality in pregnant females of smaller species carrying an overly large hybrid foetus (Nesi et al., 2011). Recent hybridization between *K. hardwickii* and *K. furva* might also be precluded by their cytogenetic distinctness (see below) and current geographic separation (Fig. 1). The available evidence thus suggests that ancient introgression event(s) between incipient species of the hardwicki complex might have occurred alongside geographical range shifts driven by climate and vegetational change during the Pliocene-Pleistocene transition.

The lack of resolution for interspecies relationships within the *hardwicki*-complex suggests that their most recent common ancestor rapidly diversified into several species. Our dating estimates based on

Figure 7 – Portrait and skull morphology of the holotype (MNHN (CG) 2017-2723, ♀) of *Kerivoula dongduongana* sp. nov. Scale bars=5 mm.

Cytb sequences indicate that species diversification within the complex took place in the Late Pliocene-Early Pleistocene (4.03–2.72 Mya) (Fig. S11). During the Miocene and until the early Pliocene, Southeast Asia was a single rainforest block as a result of warm and humid climatic conditions (Morley, 2000; Meijaard and Groves, 2006). The period of diversification therefore appears to coincide with the onset of extensive glaciations during the Late Pliocene, which led to the development of more open vegetation and isolation of forest dependent species including common ancestors of taxa within the *hardwickii*-complex into several refugia across Asia. Since *Kerivoula* spp. are characterised by low vagility (Rossiter et al., 2012), vicariance of forest habitats into distinct ancestral refugia might act as casual factors preventing gene flow among isolated ancestral populations of the complex and facilitating allopatric speciation events. In contrast, during interglacial periods of the Pliocene-Pleistocene epochs, warmer and humid conditions promoted the expansion of rain forests (Morley, 2000; Meijaard and Groves, 2006) and subsequently also the distribution range of allopatric incipient taxa from isolated glacial refugia (Khan et al., 2010; Tu et al., 2017). As a consequence, secondary contact(s) between these taxa (via the overlapping geographic range of some extant taxa in Fig. 1) might have facilitated the exchange of genetic material through hybridization (Berthier et al., 2006; Mao et al., 2010). However, based on the inferred ancient rapid radiation, introgression event(s) between incipient taxa in the *hardwickii* complex might have ceased since the early phases of glacial - interglacial cycles of the Pliocene-Pleistocene boundary.

Based on our results and available literature, it can be hypothesized that the interspecific diversification involved mechanisms that were not always mutually exclusive. For instance, different isolated ancestral populations adaptively evolved under divergent selection pressures imposed by special paleo-environmental conditions of allopatric ancestral refugia. The larger body size of *K. kachinensis* suggest that its ancestors might have evolved in a given refugium that selected for gigantism (Taylor et al., 2012), whereas the significant overlap in examined morphological characters among the small sized species (*K. hardwickii* s.str., *K. depressa*, *K. furva*, and *K. dongduongana* sp.n.) suggest that their ancestors evolved under similar natural selections on these traits (Tu et al., 2015, 2017). However, *K. hardwickii* s.str. specimens from Borneo have 2n=26 chromosomes (Khan et al., 2010), whereas *K. furva* specimens from Hainan and Taiwan have 2n=32 chromosomes (Wu et al., 2012; originally identified as *K. titania*). These cytogenetic differences suggest that chromosomal divergence may have been associated with allopatric speciation within the complex. Thus, further cytogenetic analyses of bats of *K. depressa*, and *K. dongduongana* sp.n. are needed to test this hypothesis. If confirmed, it might explain the absence of recent gene flow between morphologically and similarly-sized species living in sympatry.

It should be noted that small taxa within the *hardwickii*-complex may have divergent echolocation calls, as an indirect result of allopatric speciation. For example, Douangboubpha et al. (2015) found in Thailand that echolocation calls of *K. hardwickii* A (with "flattened" skulls) differ significantly from those of *K. hardwickii* C (with domed skull) in parameters such as MaxF (maximum frequency, kHz): 222.0–234.0 vs. 194.0–245.0; MinF (minimum frequency, kHz): 74.0–87.0 vs. 62.0–86.0; and MaxEF (maximum energy frequency, kHz): 145.9–180.7 vs. 129.5–186.4. In addition, based on Kuo et al. (2017), echolocation calls emitted by bats of *K. furva* found in Taiwan can be differentiated from those of *K. hardwickii* A (with "flattened" skulls) recorded in Thailand by Douangboubpha et al. (2015) such as MaxF: 182.4–222.1 vs. 222.0–234.0; MinF: 105.7–118.3 vs. 74.0–87.0; and MaxEF: 141.8–163.3 vs. 145.9–180.7. Although divergence in echolocation calls among sister bat taxa could explain how they can share their ecological niches, particularly in sympatry (Kingston et al., 2001), it also suggests that allopatrically ancestral populations might have evolved their own Specific-Mate-Recognition Systems (SMRS) during speciation (Cotterill, 2002; Taylor et al., 2012). These SMRS might have subsequently served as boundaries to gene flow among sister taxa within the *hardwickii*-complex where their geographical ranges expanded into sympatry.

References

An Z., 2000. The history and variability of the East Asian paleomonsoon climate. Quaternary Sci. Rev. 19(1–5): 171–187.

An Z., Kutzbach J.E., Prell W.L., Porter S.C., 2001. Evolution of Asian monsoons and phased uplift of the Himalaya–Tibetan plateau since Late Miocene times. Nature 411(6833): 62–66.

Averyanov L.V., Loc P.K., Hiep N.T., Harder D., 2003. Phytogeographic review of Vietnam and adjacent areas of Eastern Indochina. Komarovia 3: 1–83.

Bain R.H, Hurley M.M., 2011. A biogeographic synthesis of the amphibians and reptiles of Indochina. Bull. Am. Mus. Nat. Hist. 360: 1–138.

Barlow K.E., Jones G., Barratt E.M., 1997. Can skull morphology be used to predict ecological relationships between bat species? A test using two cryptic species of pipistrelle. Proc. Biol. Sci. 264(1388): 1695–1700.

Bates P.J.J,.Francis C., 2008. *Kerivoula kachinensis*. The IUCN Red List of Threatened Species 2008: e.T136240A4264120. doi:10.2305/IUCN.UK.2008.RLTS.T136240A4264120.en.
Bates P.J.J, Harrison D.L., 1997. Bats of the Indian Subcontinent, Harrison Zoological Museum, Sevenoaks, Kent.
Bates P.J.J., Struebig M.J., Hayes B.D., Furey N.M., Mya K.M., Thong V.D., Tien P.D., Son N.T., Harrison D.L., Francis C.M, Csorba G., 2007. A new species of *Kerivoula* (Chiroptera: Vespertilionidae) from Southeast Asia. Acta Chiropt. 9(2): 323–337.
Berthier P., Excoffier L., Ruedi M., 2006. Recurrent replacement of mtDNA and cryptic hybridization between two sibling bat species *Myotis myotis* and *Myotis blythii*. Proc. R. Soc. B 273(1605): 3101–3123.
Bickford D., Lohman D.J., Sodhi N.S., Ng P.K.L., Meier R., Winker K., Ingram K.K., Das I., 2007. Cryptic species as a window on diversity and conservation. Trends Ecol. Evol. 22(3): 148–155.
Bogdanowicz W., Fenton M.B, Daleszczyk K., 1999. The relationships between echolocation calls, morphology and diet in insectivorous bats. J. Zool. 247(3): 381–393.
Bouckaert R., Heled J., Kühnert D., Vaughan T., Wu C.-H., Xie D., Suchard M.A., Rambaut A., Drummond A.J., 2014. BEAST 2: A software platform for Bayesian evolutionary analysis. PLOS Comput. Biol. 10(4): e1003537.
Chang Y.-C., Chou C.-H., Chen Y.-W., Lan C.-L., Lin L.-K., 2010. Furled young banana leaves as roost for the Taiwanese woolly bat (*Kerivoula* sp.). Nature Conservation Quarterly 72: 3–7. [In Chinese]
Chiang C.-L., 2006. Diet and foraging strategies of Taiwanese woolly bat (*Kerivoula* sp.) at Bailan, Hsinchu. M.Sc. thesis, National Taiwan University, Taipei.
Corbet G.B., Hill J.E., 1992. The mammals of the Indomalayan region: A systematic review. Oxford University Press, Oxford.
Cotterill F.P.D., 2002. A new species of horseshoe bat (Microchiroptera: Rhinolophidae) from south-central Africa: With comments on its affinities and evolution, and the characterization of rhinolophid species. J. Zool. 256(2): 165–179.
Degnan J.H., Rosenberg N.A., 2009. Gene tree discordance, phylogenetic inference and the multispecies coalescent. Trends Ecol. Evol. 24(6): 332–340.
Dool S.E., Puechmaille S.J., Foley N.M., Allegrini B., Bastian A., Mutumi G.L., Maluleke T.G., Odendaal L.J., Teeling E.C., Jacobs D.S., 2016. Nuclear introns outperform mitochondrial DNA in inter-specific phylogenetic reconstruction: Lessons from horseshoe bats (Rhinolophidae: Chiroptera). Mol. Biol. Evol. 97: 196–212.
Douangboubpha B., Bumrungsri S., Satasook C., Wanna W., Soisook P., Bates P.J.J., 2015. Morphology, genetics and echolocation calls of the genus *Kerivoula* (Chiroptera: Vespertilionidae: Kerivoulinae) in Thailand. Mammalia 80(1): 21–47.
Francis C.M., 2008. A field guide to the mammals of South-East Asia. New Holland Publishers, London.
Francis C.M., Kingston T, Zubaid A., 2007. A new species of *Kerivoula* (Chiroptera: Vespertilionidae) from peninsular Malaysia. Acta Chiropt. 9(1): 1–12.
Francis C.M., Borisenko A.V., Ivanova N.V., Eger J.L., Lim B.K., Guillén-Servent A., Kruskop S.V., Mackie I, Hebert P.D.N., 2010. The role of DNA barcodes in understanding and conservation of mammal diversity in Southeast Asia. PLoS ONE 5: e12575.
Freeman P.W., 1981. Correspondence of food habits and morphology in insectivorous bats. J. Mammal. 62(1): 166–173.
Funk D.J., Omland K.E., 2003. Species-level paraphyly and polyphyly: frequency, causes, and consequences, with insights from animal mitochondrial DNA. Annu. Rev. Ecol. Evol. Syst. 34: 397–423.
Hammer Ø., Harper D.A.T, Ryan P.D., 2001. PAST: Paleontological statistics software package for education and data analysis. Palaeontol. Electron 4(1): 1–9. http://palaeo-electronica.org/2001_1/past/issue1_01.html.
Hasan N.H, Abdullah M.T., 2011. A morphological analysis of *Malaysian Kerivoula* (Chiroptera, Vespertilionidae). Mammal Study 36(2): 87–97.
Hassanin A., 2014. Description of a new bat species of the tribe Scotonycterini (Chiroptera, Pteropodidae) from southwestern Cameroon. C. R. Biol. 337(2): 134–42.
Hassanin A, Tu V.T., 2010. Mammal survey in North Cambodia, with special emphasis on bats, Museum National d'Histoire Naturelle, Paris.
Hassanin A., Delsuc F., Ropiquet A., Hammer C., Jansen van Vuuren B., Matthee C., Ruiz-Garcia M., Catzeflis F., Areskoug V., Nguyen T.T, Couloux A., 2012. Pattern and timing of diversification of Cetartiodactyla (Mammalia, Laurasiatheria), as revealed by a comprehensive analysis of mitochondrial genomes. C. R. Biol. 335(1): 32–50.
Hassanin A., An J., Ropiquet A., Nguyen T.T, Couloux A., 2013. Combining multiple autosomal introns for studying shallow phylogeny and taxonomy of Laurasiatherian mammals: Application to the tribe Bovini (Cetartiodactyla, Bovidae). Mol. Phylogenet. Evol. 66(3): 766–775.
Hassanin A., Colombo R., Gembu G.-C., Merle M., Tu V.T., Görföl T., Akawa P.M., Csorba G., Kearney T., Monadjem A., Ing R.K., 2017. Multilocus phylogeny and species delimitation within the genus *Glauconycteris* (Chiroptera, Vespertilionidae), with the description of a new bat species from the Tshopo Province of the Democratic Republic of the Congo. J. Zool. Syst. Evol. Res. 56: 1–22.
Hassanin A., Khouider S., Gembu G.-C., Goodman S.M., Kadjo B., Nesi N., Pourrut X., Nakouné E., Bonillo C., 2015. The comparative phylogeography of fruit bats of the tribe Scotonycterini (Chiroptera, Pteropodidae) reveals cryptic species diversity related to African Pleistocene forest refugia. C. R. Biol. 338(2): 197–211.
Heled J., Drummond A.J., 2010. Bayesian Inference of species trees from multilocus data. Mol. Biol. Evol. 27(3): 570–580.
Hill J.E., 1965. Asiatic bats of the genera *Kerivoula* and *Phoniscus* (Vespertilionidae), with a note on *Kerivoula aerosa* Tomes. Mammalia 29(4): 524–556.
Hill J.E., Rozedaal F.G., 1989. Records of bats (Microchiroptera) from Wallacea. Zool. Meded. 83(10): 97–122.
Hoofer S.R., Reeder S.A., Hansen E.W, Van Den Bussche R.A., 2003. Molecular phylogenetics and taxonomic review of Noctilionoid and Vespertilionoid bats (Chiroptera: Yangochiroptera). J. Mammal. 84(3): 809–821.
Horsfield T., 1824. Zoological researches in Java, and the neighbouring islands. Printed for Kingsbury, Parbury, and Allen, London.
Hulva P., Horáček I., Strelkov P.P, Benda P., 2004. Molecular architecture of *Pipistrellus pipistrellus*/emphPipistrellus pygmaeus complex (Chiroptera: Vespertilionidae): Further cryptic species and Mediterranean origin of the divergence. Mol. Phylogenet. Evol. 32(3): 1023–1035.
Inger R.F, Voris H.K., 2001. The biogeographical relations of the frogs and snakes of Sundaland. J. Biogeogr. 28(7): 863–891.
Jungers W.L., Falsetti A.B., Wall C.E., 1995. Shape, relative size, and size-adjustments in morphometrics. Am. J. Phys. Anthropol. 38(S2): 137–161.
Keppel G., Van Niel K.P., Wardell-Johnson G.W., Yates C.J., Byrne M., Mucina L., Schut A.G.T., Hopper S.D., Franklin S.E., 2012. Refugia: identifying and understanding safe havens for biodiversity under climate change. Glob. Ecol. Biogeogr. 21(4): 393–404.
Khan F.A.A., Solari S., Swier V.J., Larsen P.A., Abdullah M.T, Baker R.J., 2010. Systematics of Malaysian woolly bats (Vespertilionidae: Kerivoula) inferred from mitochondrial, nuclear, karyotypic, and morphological data. J. Mammal. 91(5): 1058–1072.
Kingston T., Jones G., Akbar Z, Kunz T.H., 1999. Echolocation signal design in Kerivoulinae and Murininae (Chiroptera: Vespertilionidae) from Malaysia. J. Zool. 249(3): 359–374.
Kingston T., Lara M.C., Jones G., Akbar Z., Kunz T.H, Schneider C.J., 2001. Acoustic divergence in two cryptic Hipposideros species: a role for social selection? Proc. R. Soc. Lond. B. 268(1474): 1381–1386.
Kuo H.-C., Chen S.-F., Fang Y.-P., Flanders J., Rossiter S. J., 2014. Comparative rangewide phylogeography of four endemic Taiwanese bat species. Mol. Ecol. 23(14): 3566–3586.
Kuo H.-C., Soisook P., Ho Y.-Y., Csorba G., Wang C.-N, Rossiter S.J., 2017. A taxonomic revision of the *Kerivoula hardwickii* complex (Chiroptera: Vespertilionidae) with the description of a new species. Acta Chiropt. 19(1): 19–39.
Lindenfors P., Gittleman J.L., Jones K.E., 2007. Sexual size dimorphism in mammals. In: Fairbairn D.J., Blanckenhorn W.U., Székely T. (Eds.) Sex, size and gender roles: Evolutionary studies of sexual size dimorphism. Oxford University Press), Oxford. 16–26.
Liao W.-C., 2013. Detecting and gleaning prey by Murina and Kerivoula bats. M.Sc. thesis, National Taiwan University, Taipei.
Mao X.G., Zhu G.J., Zhang S, Rossiter S.J., 2010. Pleistocene climatic cycling drives intraspecific diversification in the intermediate horseshoe bat (*Rhinolophus affinis*) in Southern China. Mol. Ecol. 19(10): 2754–2769.
Meijaard E., Groves C.P., 2006. The geography of mammals and rivers in mainland Southeast Asia. In: Lehman S.M., Fleagle J.G. (Eds.) Primate Biogeography: Progress and Prospects, Springer, Boston. 305–329.
Miller G.S., 1906a. The mammals of Engano Island, West Sumatra. Proc. Natl. Acad. Sci. 30(1472): 819–825.
Miller G.S., 1906b. Seven new Malayan bats. Proc. Biol. Soc. Wash. 19: 61–65.
Monastyrskii A.L, Holloway J.D., 2013. The biogeography of the butterfly fauna of Vietnam with a focus on the endemic species (Lepidoptera). In: Silva-Opps M. (Ed.) Current Progress in Biological Research, InTech, Rijeka. 95–123.
Morley R.J., 2000. Origin and evolution of tropical rain forests. John Wiley and Sons Ltd, London.
Nesi N., Nakouné E., Cruaud C., Hassanin A., 2011. DNA barcoding of African fruit bats (Mammalia, Pteropodidae). The mitochondrial genome does not provide a reliable discrimination between *Epomophorus gambianus* and *Micropteropus pusillus*. C. R. Biol. 334(7): 544–554.
Nichols R., 2001. Gene trees and species trees are not the same. Trends Ecol. Evol. 16(7): 358–364.
Pamilo P., Nei M., 1988. Relationships between gene trees and species trees. Mol. Biol. Evol. 5(5): 568–583.
Phillips W.W., 1932. Addition to the Fauna of Ceylon. No 2: Some new and interesting bats from the hills of the Central Province. Spolia Zeylan. 16: 329–335.
Posada D., 2008. jModelTest: Phylogenetic model averaging. Mol. Biol. Evol. 25(7): 1253–1256.
Rambaut A., 2009. FigTree v.1.4.0 2006–2012. http://tree.bio.ed.ac.uk/software/figtree/
Ronquist F., Teslenko M., van der Mark P., Ayres D.L., Darling A., Hohna S., Larget B., Liu L., Suchard M.A, Huelsenbeck J.P., 2012. MrBayes 3.2: Efficient Bayesian phylogenetic inference and model choice across a large model space. Syst. Biol. 61(3): 539–542.
Ropiquet A., Li B, Hassanin A., 2009. SuperTRI: A new approach based on branch support analyses of multiple independent data sets for assessing reliability of phylogenetic inferences. C. R. Biol. 332(9): 832–847.
Rosell-Ambal G., Tabaranza B., Heaney L., Molur S, Srinivasulu C., 2008. *Kerivoula hardwickii*. The IUCN Red List of Threatened Species 2008: e.T10974A3233035. doi:10.2305/IUCN.UK.2008.RLTS.T10974A3233035.en
Rossiter S.J., Zubaid A., Mohd-Adnan A., Struebig M.J., Kunz T.H., Gopal S., Petit E.J., Kingston T., 2012. Social organization and genetic structure: insights from codistributed bat populations. Mol. Ecol. 21(3): 647–661.
Ruedi M., Biswas J, Csorba G., 2012. Bats from the wet: two new species of tube-nosed bats (Chiroptera: Vespertilionidae) from Meghalaya, India. Rev. Suisse Zool. 119(1): 111–135.
Rundel P.W., 1999. Forest habitats and flora in Lao P.D.R., Cambodia and Vietnam. WWF Indochina Programme, Hanoi.
Sikes R.S., Gannon W.L., the Animal Care and Use Committee of the American Society of Mammalogists, 2011. Guidelines of the American Society of Mammalogists for the use of wild mammals in research. J. Mammal. 92(1): 235–253.
Simmons N.B., 2005. Order Chiroptera. In: Wilson D.E., Reeder D.M. (Eds.) Mammal species of the World: a taxonomic and geographic reference, 3rd edition. Johns Hopkins University Press, London. 312–529.
Soisook P., Bumrungsri S., Satasook C., Thong V.D., Bu S.S.H., Harrison D.L, Bates P.J.J., 2008. A taxonomic review of *Rhinolophus stheno* and *R. malayanus* (Chiroptera: Rhinolophidae) from continental Southeast Asia: an evaluation of echolocation call frequency in discriminating between cryptic species. Acta Chiropt. 10(2): 221–242.
Son N.T., Motokawa M., Oshida T., Endo H., 2015. A morphological analysis of the skull size and shape of Kerivoulinae (Chiroptera: Vespertilionidae) from Vietnam. J. Vet. Med. Sci. 78(2): 187–198.
Stewart J.R., Lister A.M., Barnes I., Dalen L., 2010. Refugia revisited: individualistic responses of species in space and time. Proc. Biol. Sci. 277(1682): 661–671.
Sun K.-P., Feng J., Jiang T.-L., Ma J., Zhang Z.-Z, Jin L.-R., 2008. A new cryptic species of *Rhinolophus macrotis* (Chiroptera: Rhinolophidae) from Jiangxi Province, China. Acta Chiropt. 10(1): 1–10.
Swofford D.L., 2003. PAUP∗. Phylogenetic Analysis Using Parsimony (∗and Other Methods). Version 4. Sinauer Associates, sunderland, MA.
Tate G.H.H., 1941. Notes on vespertilionid bats of the subfamilies Miniopterinae, Murininae, Kerivoulinae, and Nyctophilinae. Bull. Am. Mus. Nat. Hist. 78: 567–597.
Taylor P.J., Stoffberg S., Monadjem A., Schoeman M.C., Bayliss J., Cotterill, F.P.D., 2012. Four new bat species (*Rhinolophus hildebrandtii* complex) reflect Plio-Pleistocene divergence of dwarfs and giants across an Afromontane archipelago. PLOS ONE 7: e41744.

Tu V.T., Csorba G., Görföl T., Arai S., Son N.T., Thanh H.T., Hassanin A. 2015. Description of a new species of the genus *Aselliscus* (Chiroptera, Hipposideridae) from Vietnam. Acta Chiropt. 17(2): 233–254.

Tu V.T., Csorba G., Ruedi M., Furey N.M., Son N.T., Thong V.D., Bonillo C, Hassanin A., 2017. Comparative phylogeography of bamboo bats of the genus *Tylonycteris* (Chiroptera, Vespertilionidae) in Southeast Asia. Eur. J. Taxon. 274: 1–38.

Wroughton R.C, Ryley K.V., 1913. Scientific results from the Mammal Survey. Part III. J. Bombay Nat. Hist. Soc. 22: 13–21.

Wu Y., Li Y., Lin L.-K., Harada M., Chen Z, Motokawa M., 2012. New records of Kerivoula titania (Chiroptera: Vespertilionidae) from Hainan island and Taiwan. Mammal Study 37(1): 69–72.

Yoshiyuki M., Lin L.-K., Mizusawa T, Honda N., 2010. New record of Hardwicke's forest bat, *Kerivoula hardwickii* (Horsfield, 1824) (Chiroptera, Vespertilionidae, Kerivoulinae) from Taiwan. Animate 8: 1–10.

Zar J.H., 1999. Biostatistical Analysis. Prentice Hall, NJ.

Zhang L.B., Jones G., Rossiter S., Ades G., Liang B, Zhang S.Y., 2005. Diet of flat-headed bats, *Tylonycteris pachypus* and *T. robustula*, in Guangxi, South China. J. Mammal. 86(1): 61–66.

Associate Editor: D. Russo

Supplemental information

Additional Supplemental Information may be found in the online version of this article:

Table S1 Numbers assigned for collecting localities of specimens.

Table S2 Summary of genetic markers used and specimens that were morphologically examined.

Table S3 Genbank accession numbers included in phylogenetic reconstructions.

Figure S4 Bayesian trees reconstructed from mtDNA genes for *Kerivoula* spp. and associated outgroups.

Figure S5 Bayesian tree of *RAG2* for *Kerivoula* spp. and associated outgroups.

Figure S6 Bayesian tree of Supermatrix and SuperTRI for *Kerivoula* spp. and associated outgroups.

Figure S7 SuperTRI analyses.

Figure S8 Bayesian analyses of the eight independent genes.

Figure S9 Consensus (A) and Densitree (B) species tree of the genus *Kerivoula*.

Table S10 Uncorrected pairwise p-distances.

Figure S11 Chronogram reconstructed from the cytochrome b dataset.

Table S12 External and craniodental measurements (in mm) of studied *Kerivoula* spp.

Table S13 Character factor loadings for PCs, obtained from PCAs on log-transformed raw and standardized craniodental measurements of studied *Kerivoula hardwickii* s.l.