HAL
open science

Description of the Stygobiotic Crustacean Dolekiella europaea gen. Nov. sp. Nov. (Ostracoda, Limnocytheridae) from southern France.

Z. Gidó, M. Artheau, J.-P. Colin, D. L. Danielopol, Pierre Marmonier

To cite this version:

Z. Gidó, M. Artheau, J.-P. Colin, D. L. Danielopol, Pierre Marmonier. Description of the Stygobiotic Crustacean Dolekiella europaea gen. Nov. sp. Nov. (Ostracoda, Limnocytheridae) from southern France.. Vie et Milieu / Life & Environment, 2007, 57 (1-2), pp.109-116. hal-03234956

HAL Id: hal-03234956

https://hal.sorbonne-universite.fr/hal-03234956v1

Submitted on 25 May 2021

HAL is a multi-disciplinary open access archive for the deposit and dissemination of scientific research documents, whether they are published or not. The documents may come from teaching and research institutions in France or abroad, or from public or private research centers.

L'archive ouverte pluridisciplinaire **HAL**, est destinée au dépôt et à la diffusion de documents scientifiques de niveau recherche, publiés ou non, émanant des établissements d'enseignement et de recherche français ou étrangers, des laboratoires publics ou privés.

VIE ET MILIEU - LIFE AND ENVIRONMENT, 2007, 57 (1/2) : 109-116

DESCRIPTION OF THE STYGOBIOTIC CRUSTACEAN *DOLEKIELLA EUROPAEA* GEN. NOV. SP. NOV. (OSTRACODA, LIMNOCYTHERIDAE) FROM SOUTHERN FRANCE

Z. GIDÓ [1], M. ARTHEAU [2], J.-P. COLIN [3], D. L. DANIELOPOL [4], P. MARMONIER [5]*

[1] *Széchenyi utca 25, 7940 Szentlörinc, Hungary*
[2] *Université Paul Sabatier-Toulouse 3, Laboratoire d'Ecologie des Hydrosystèmes, 31062 Toulouse, France*
[3] *3 impasse des Biroulayres, 33610 Cestas, France*
[4] *Austrian Academy of Sciences, Institute of Limnology, 5310 Mondsee, Austria*
[5] *Université Rennes 1, UMR-CNRS 6553-ECOBIO, F-35042 Rennes, France*
* *Author for correspondence: dan.danielopol@oew.ac.at*

OSTRACODA
MORPHOLOGY
TAXONOMY
PHYLOGENY
BIOGEOGRAPHY

ABSTRACT. – The description of *Dolekiella europaea* gen. nov. sp. nov., a living stygobiotic representative of the Timiriaseviinae subfamily (Ostracoda, Limnocytheridae) is presented. The ostracods were sampled in wells located along the Tech, Têt and Réart Rivers (southern France). The valve morphology (specially the hinge structure) of *Dolekiella* resembles those of *Abrotocythere* Zhao, 1987, a fossil ostracod taxon known from Tertiary deposits of China. Appendages of the new genus present unique characters, like the reduction of the distal cheatotaxy of the 2nd antenna. The phylogenetical relationships of *Dolekiella* to other Timiriaseviinae taxa as well as its biogeographical interest are discussed.

INTRODUCTION

The ostracods of the family Limnocytheridae Klie spread successfully in inland waters of all major continents since the Upper Carboniferous (Whatley & Moguilevsky 1997). The family comprises approximately 150 to 200 extant species grouped within two subfamilies, the Limnocytherinae Klie and the Timiriaseviinae Mandelstam (Colin & Danielopol 1980, Meisch 2000). In the western and central inland European waters about 30 valid species are classified in six genera belonging to the Limnocytherinae and the Timiriaseviinae (Löffler & Danielopol 1978, Meisch 2000). The new genus and species *Dolekiella europaea* we describe here belongs to the latter subfamily. In Europe the Timiriaseviinae are represented by only one epigean species *Metacypris cordata* Brady & Robertson, 1870 and at least six stygobiotic species belonging to the genus *Kovalevskiella* Klein, 1963 (Colin & Danielopol 1980, Meisch 2000, Karanovic 2003, Gidó & Danielopol unpubl). Therefore the discovery in southern France of a new Timiriaseviinae ostracod living exclusively in subsurface freshwater habitats is remarkable *per se* and its morphology merits to be described. Additionally we will present arguments on plausible phylogenetic affinities and on biogeographic origins of this interesting ostracod group.

SAMPLING SITES AND MATERIAL

Sampling sites: The new species was sampled in five wells using a Cvetkov phreatobiological net, in the Roussillon plain, southern France (Fig. 1). This area is characterised by a Mediterranean climate combining dry periods and strong rainfalls. Annual precipitation fluctuates between 550 mm and 2200 mm. The sampling sites where the species was found (Artheau 2006 and Fig. 1) are located within the hydrological basins of the Têt at Millas (ROU85), the Réart at Calmeilles (ROU181, ROU200, ROU201) and the Tech at Céret (ROU191). The wells ROU181, ROU200 and ROU201 are dug within an area with Devonian limestone, coarse sandy sediments and Ordovician schists. The ROU85, ROU191 sites are located in alluvial floodplains with coarse sandy-gravel deposits.

The well ROU181 was chosen as the type location for the new ostracod species (geographic location: Calmeilles village,

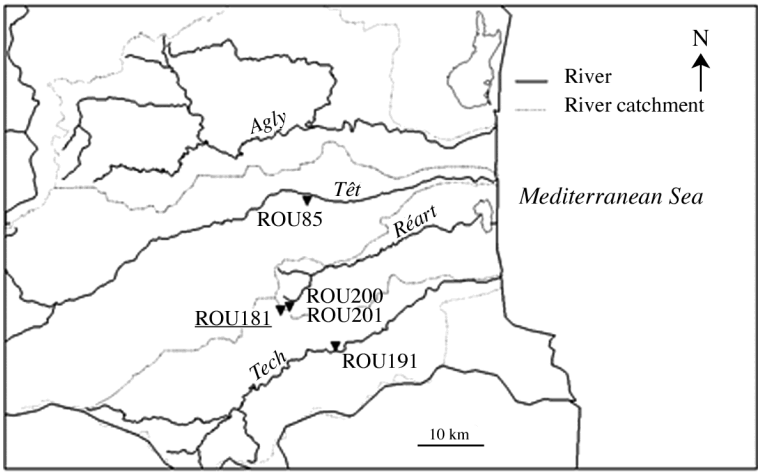

Fig. 1. – Geographic distribution of *Dolekiella europaea* gen nov. sp. nov. in southern France (triangles indicate sampling site location).

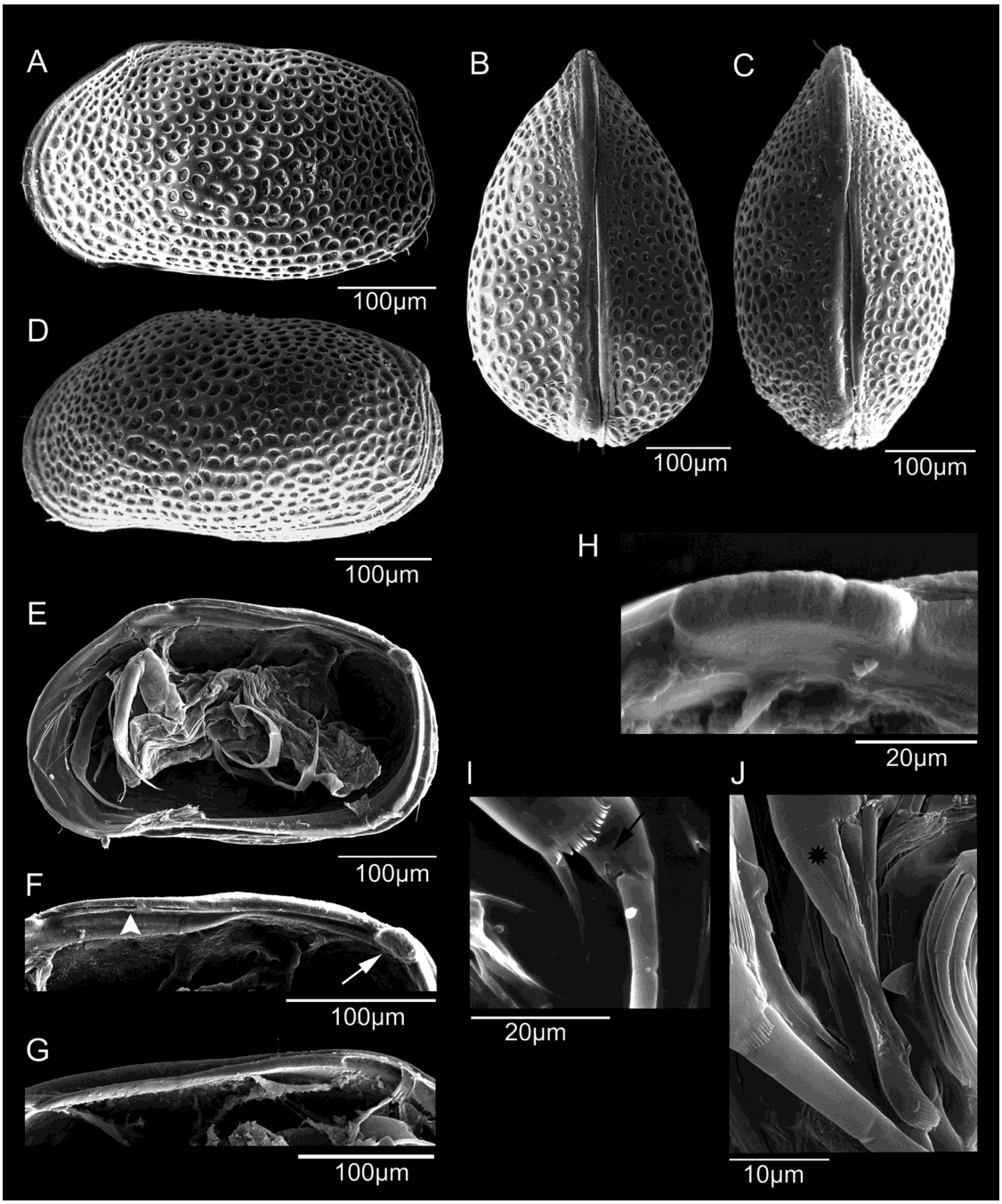

Fig. 2. – *Dolekiella europaea* gen. nov. sp. nov. A, B, E–H, J, female; C, D, I male; B, C, carapace dorsal view; A, D, left valve external view; E, right valve internal view; F, G, hinge structure of the right (F) and left (G) valves (arrows point to the posterior tooth and the anterior half of the intercardinal groove); H, anterior tooth of the hinge (detail from E); I, distal part of the antenna (arrow points to the last endopodial segment and the 2 reduced antennal setae); J, detail of the distal spatuliform claw of the mandibular palp (star).

X: 2,65968°; Y: 42,5467°; Z: 252 m). The well is 13.7 m deep, with a water level located at 3.5 m below the surface. Water temperature was 12.5°C at the sampling period (19 April 2002, coll. M Artheau and N Giani), with a low electric conductivity (215 µS/cm) and a pH close to neutrality (7.17). Inside the well, the water was well oxygenated (6.6 mg/L), with low nitrate (0.32 mg/L) and medium phosphate content (23.8 µg/L). No other ostracod species was sampled in this well, a few copepods were also found in that well.

Material studied: Type material and paratypes are deposited in the collection of Natural History Museum Vienna, Department of Crustacea, under the catalogue numbers NHMW 20711 to 20715, the limbs mounted in glycerol and sealed on 2 slides and the valves kept in tubes filled with ethanol. Holotype adult male (NHMW 20711); allotype adult female (NHMW 20712); paratypes (NHMW 20713, 20714) two females. Type series: one female adult (NHMW 20715), two males and three females used for the SEM photos and about 15 intact animals preserved

in ethanol, deposited at the Limnological Institute, Mondsee. Additional material in the collections of M Artheau at the University of Toulouse and in the collection of P Marmonier, University of Rennes.

RESULTS

Systematics: Family Limnocytheridae Klie, 1938; subfamily Timiriaseviinae Mandelstam, 1960

Dolekiella gen. nov.

Etymology: The genus is named in honour of Marie-José Dole-Olivier, distinguished expert in groundwater ecology (University of Lyon).

Type species: *Dolekiella europaea* sp. nov.

Diagnosis: Carapace shape, in dorsal view, sexually dimorphic: those of the female, moderately wider posteriorly, due to a brood pouch within the interior space (Fig. 2B); the male's homologue, angular shaped (Fig. 2C). The inner margin in its postero-ventral side of the female's valves closely located to the outer margin (Fig. 2E). Small sized valves (0.40-0.47 mm length) more or less rectangular (Fig. 2 A-E), the dorsal side elongated, slightly oblique oriented toward the posterior side, without dorso-transversal sulci, just a slight central depression (Fig. 2A). External surface of valves completely covered by moderate sized fossae (Fig. 2A-D). Hinge of lophodont type; anterior cardinal tooth on the right valve (Fig. 2H), elongated, and slightly divided in 4-5 cusps, the posterior one, globular. Intercardinal groove on the right valve (Fig. 2E, F), wider shaped and deeper in the anterior half as compared to the posterior section, with counterpart on the left valve of a stronger developed cardinal bar (Fig. 2G). Anterior fused zone of both valves and both sexes, crossed by 6 short and straight chanels, the antero-dorsal one located in a more remote position than the others (Fig. 3). First antenna (Fig. 4A) with 5 segments, the last three ones, short. Second antenna (Fig. 2I) of both sexes, with a distal endopodial segment bearing a long terminal claw and two minute setae not visible under normal transmitted microscope (Fig. 4B, C). Aesthetasc Y of the male's antenna longer than those of the female (Fig. 4B, C). Mandibular palp 4-segmented (Fig. 4D), the distal one with a claw transformed in a serrated spatula-shaped process (Fig. 2J). The 3 walking legs (WL), elongated and more or less of same size (Fig. 4F-H); protopodite on the anterior side with a reduced number of setae: 1st WL – 2+1, 2nd and 3rd WL – 1+1 (Fig. 4F-H). Hemipenis (Fig. 4I) with an articulated distal lobe; the peniferum on its distal side with a group of minute cilia; copulatory process short and funnel-shaped.

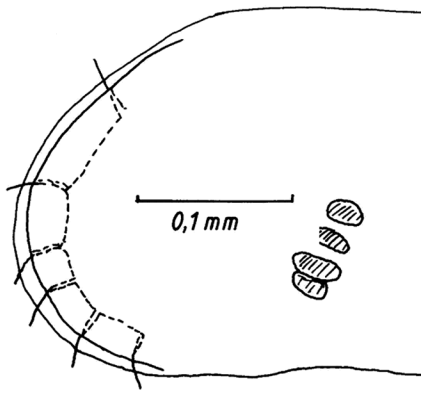

Fig. 3. - *Dolekiella europaea* gen. nov. sp. nov. detail of the anterior part of the female's valve (external view).

Taxonomic position: The new genus *Dolekiella* is refered to the subfamily Timiriaseviinae Mandelstam because of the following features: female carapace with slightly developed brood pouch; lophodont hinge with well developed cardinal teeth; antennula with a long seta on the proximal third of the 2nd segment; terminal antennular segment (6th) short (Fig. 4A); mandibular gnathobasis with a spatula-like claw, located between the 1st and 2nd tooth; short maxillular palp with very long distal setae, a minute one in sub-terminal position, and without distal segment on this palp (Fig. 4E); hemipenis with an articulated distal lobe and copulatory process short and funnel-shaped.

Dolekiella europaea sp. nov.

Etymology: The species name comes from Europa and should remember that this remarkable ostracod was discovered and further studied by us within the framework of the European project PASCALIS.

Description: Because the genus is based on a unique species we add here only details not mentioned in the generic diagnosis.

Carapace:

Left and right valves in external view and between both sexes, similar in shape and size (Fig. 2A, D, E). Anterior and posterior cardinal angles well pronounced. Anterior vestibulum equals approximately 10 % of the valve length, posterior vestibulum is narrower, widest at the postero-ventral corner, extends to the anterior 1/3 along the ventral margin. Hinge with an intercardinal bar located sub-marginally (Fig. 2G). Cardinal sockets open (Fig. 2G).

Surface of the valves with moderately large fossae irregularly arranged (Fig. 2A, D). Walls between the fossae have smooth surface and minute pores visible at large SEM enlargement. Sparse setae emerge on the external side of the valves. There are four central muscle scars arranged in an oblique line (Fig. 3). Carapace width to length ratio (W/L) is larger in females (approximately 0.6) than in males (0.56) (Fig. 2B). There is a very slight depression of the valves in the muscle scar area. Left valve overlaps the right at the anterior end, right valve overlaps the left one at the posterior end. Valves unpig-

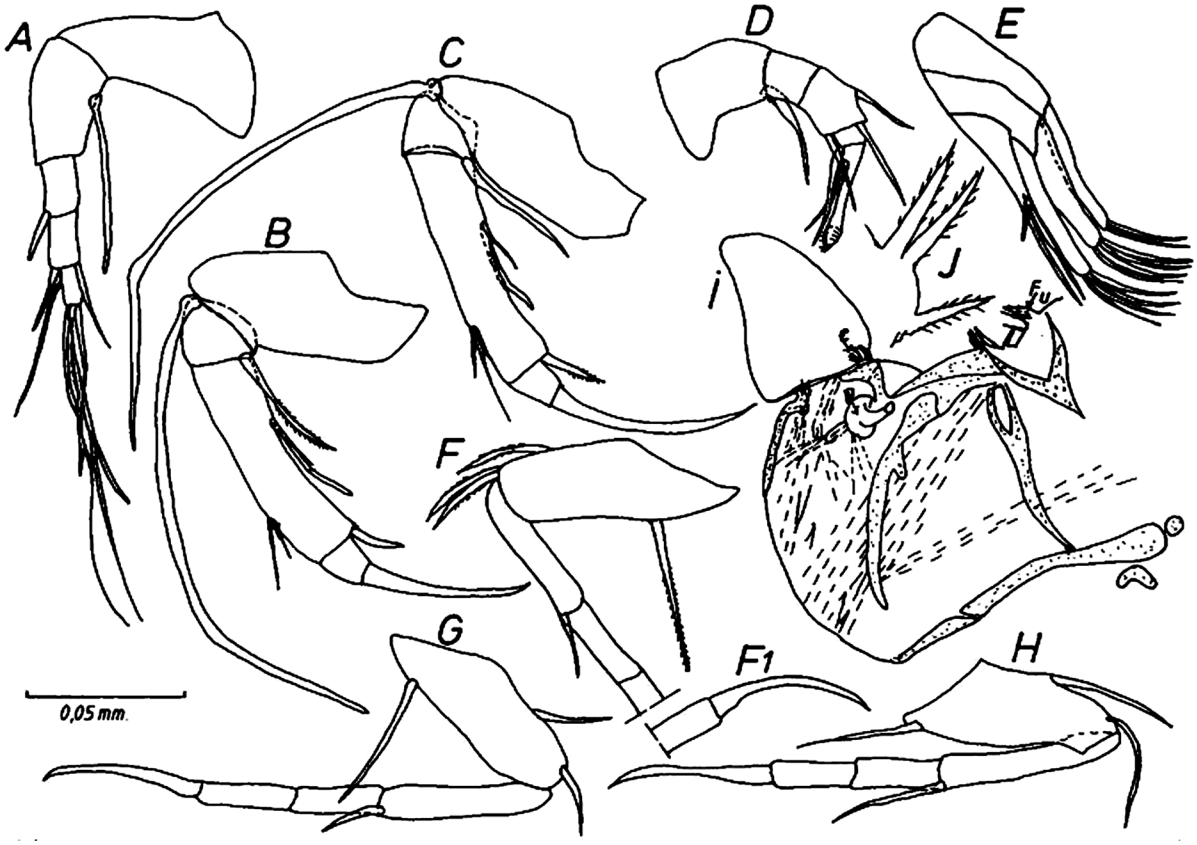

Fig. 4. - *Dolekiella europaea* gen. nov. sp. nov. A, B, G, H, I, male; C-F, J, female; A, antennula; B, C antenna; D, mandibular palp; E, maxillula; F, 1st walking leg; G, 2nd walking leg; H, 3rd walking leg; I, hemipenis; J, furca.

mented.

Measurements: female carapace length: 0.44-0.47 mm, height: 0.23 mm, width: 0.27 mm, height-length ratio: 0.51; male carapace length: 0.42-0.43 mm height-length ratio: 0.53.

Limbs:

First antenna (Fig. 4A) having on its 3rd segment a short antero-distal seta, the 4th with two antero-distal and one postero-distal setae, the 5th segment distally with 3 setae and an aesthetasc ya which is 5 times longer than the last segment.

Second antenna (Fig. 4B, C) with a geniculated exopodite. 1st endopodial segment with strong postero-distal seta; 2nd endopodial segment with 2 setae on the anterior part, one seta and the aesthetasc Y on the posterior side and a strong postero-distal seta. Aesthetasc Y nearly half as long as the second endopodial segment at the male, and approximately 0.4 times as long as the second endopodial segment at females. Terminal segment (Fig. 4F, H) with a very long curved distal claw, which approximates 0.9 times the length of the 2nd endopodial segment and 2 minute postero-medial setae, one representing 0.6 the length of the distal segment the other one being half as long as the former one.

Mandibular palp 4 segmented (Fig. 2J, 4D), the 2nd segment with a posterior seta, the 3rd one with anterior, antero-distal and postero-distal setae. Last segment, distally, having a large spoon-like claw and a seta inserted on the upper third margin of this process. On the inner side of the distal segment there is a long seta.

Maxillula (Fig. 4E) with 3 masticatory lobes, and an unsegmented palp, with two long pappose setae.

Walking legs 1-3 (Fig. 4F, H) differing slightly one from the other, excepting the length of the seta belonging to the 1st endopodial segment and of the distal claw which are longer in the WL 3 as compared to the previous two legs.

Furca (Fig. 4J) with three strong setae, 2 dorsally closely located and a 3rd one located on the ventral side of the furcal lobe.

Hemipenis (Fig. 4I) with a blunt articulated triangular distal lobe. There is a brush-like hair-group at the base of the distal lobe.

Naupliar eye reduced, unpigmented, not visible on our material.

Phylogenetic affinities

The new species *Dolekiella europaea* belongs to a cluster of genera which form what one could call Timiriaseviinae *sensu stricto*, namely the genera *Timiriasevia* Mandelstam, 1947, *Metacypris* Brady & Robertson,

1870, *Sinuocythere* Colin *et al.*, 2000, *Kovalevskiella* Klein, 1963, *Rosacythere* Colin, 1980, *Frambocythere* Colin, 1980 and *Abrotocythere* Zhao, 1987. Representatives of these taxa have a carapace of minute size (length less than 0.7 mm). Valves of *Metacypris cordata* Brady and Robertson, 1870, *Kovalevskiella* sp. and of *D. europaea* we examined (DLD unpubl) bear isolated or unorganised clusters of minute pores generally with a diameter of less than 0.1-0.3 µm (such structures were not observed on the fossil species), in contrast to the true sieve-type plates and/or sieve-type pores where the pores are spread on a plate or around a seta and have larger diameters (*cf* for these latter morphological structures, Martens 1995, Horne *et al.* 2002, Karanovic 2006). Hence we excluded for the time the possible relationships of *Dolekiella* gen. nov. with genera having representatives with short valves and sieve plates, respectively *Gomphodella*, De Deckker 1981 and *Gomphocythere* Sars, 1924. *Gomphodella* species have unusual antennular, maxillular, and furcal traits (*cf* Karanovic 2006). We excluded also large size genera (with valves longer than 0.7 mm), like *Cytheridella* Daday, 1905, *Elpidium* Müller, 1880, *Theriosynoecum* Branson, 1936, *Afrocythere* Klie, 1935. Two timiriaseviine species displaying carapace lenghts of less than 0.7 mm length assigned by Whatley *et al.* (2002) to the genus *Gomphocythere* Sars (*G. akalypton* Whatley *et al.*, 2002 and *G. dasyderma* Whatley *et al.*, 2002) are not here considered as we do not have information on their carapace inner structure, especially on their hinge details.

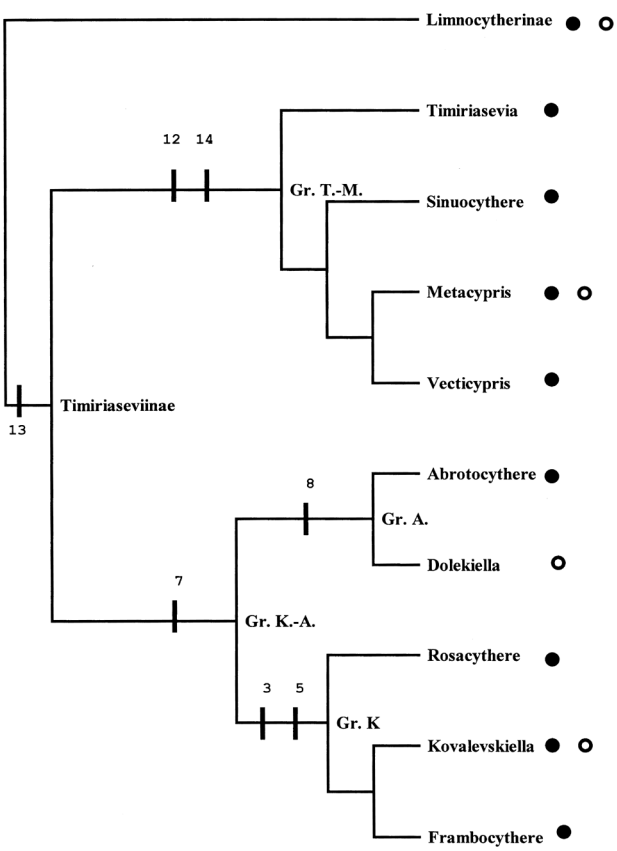

Fig. 5. – Phylogenetic tree of the Timiriaseviinae *sensu stricto* (*cf* text); bars, synapomorphic traits, numbers relate to the character traits in Table I; open circles, living species; full circles, fossil species; Gr T.- M. Group *Timiriasevia-Metacypris*, Gr. K.- A. Group *Kovalevskiella-Abrotocythere*, Gr. A. Group *Abrotocythere*, Gr. K Group *Kovalevskiella*.

Tables I and II and figure 5 show the results of a cladistic analysis performed using 14 morphological traits of the carapace of 10 taxa (Limnocytherinae were chosen as outgroup and we used information from Martens 1980 & Meisch 2000). The analysis was done with the computer programme PAUP 4.10, Beta version for Windows (Swofford 1998) using parsimony algorithm and branch and bound as search routine. Nine most parsimonious trees (26 steps) were found (based on 10 informative characters). The tree that better matches with available historical evidences that concern the timing of appearence of the different lineages is plotted in Fig. 5. Most of these groups started during the Mesozoic: *Timiriasevia* in the Upper Triassic, others in the Middle Jurassic, *Rosacythere* in the Bajocian (Colin & Carbonel 1996, Colin & Dépêche 1997), *Sinuocythere* in the Bathonian (Colin *et al.* 2000). *Metacypris* and *Vecticypris* started in the Upper Cretaceous, the former in the Campanian, the latter probably already existed in the Albian and the Cenomanian (Colin & Danielopol 1980, Babinot *et al.* 1996, Colin & Dépêche 1997, Colin *et al.* 2000), *Frambocythere* in the Albian (Colin 1993). Living species of *Metacypris* exist in Europe and Eastern Asia (Löffler & Danielopol 1978, Smith & Hiruta 2004). *Kovalevskiella* is known from the Oligocene to present day in Europe (Carbonel *et al.* 1986) and *Abrotocythere* was found only in the Oligocene (?) - Miocene in south-western China (Zhao 1987a, b). *Dolekiella* gen. nov. appears as the sister group of *Abrotocythere* due to the synapomorphic trait of the inter-cardinal bar and groove, stronger developed on the anterior half of the hinge (Tables I, II, Fig. 5). Additionally one should note that females of *Dolekiella europaea* with their small brood pouch (respectively the maximal carapace width in dorsal view is about 0.6 of the maximal carapace length) resemble those figured for *Abrotocythere* species (Zhao 1987a, 1987b).

DISCUSSION

Within the complex of species belonging to the group *Kovalevskiella-Abrotocythere* (*cf* Fig. 5), *Dolekiella europaea* sp. nov. and six living species of the genus *Kovalevskiella* (Colin & Danielopol 1980, Karanovic 2003, Gidó & Danielopol unpubl) could be considered "living fossils" belonging to a large clade which in the past was more species rich, respectively *Rosacythere* 6 species, *Frambocythere* 11 species, one with 6 sub-

Table I. - Character types of the valves for Timiriseviinae genera of reduced size (carapace length < 700 µm). Ingroup taxa: *Timiriasevia, Metacypris, Kovalev - skiella, Vecticypris, Rosacythere, Fram - bocythere, Abrotocythere, Sinuocythere, Dolekiella*; Outgroup: Limnocytherinae

1. Length of the female carapace: 0 - length > 700 µm; 1 - length < 700 µm.
2. Negative ornamentation: 0 – smooth; 1 – foveolae unordered; 2 – fossae unordered; 3- foveolae linearly (concentrically) ordered; 4 – foveolae in "rosette" ordered; 5 - fossae in "rosette" ordered.
3. Positive ornamentation (nodes and/or tubercles excluded): 0 – none; 1 –costae; 2 – pustules; 3- reticulum.
4. Mediodorsal sulcus (with imprint on the internal side of the valve): 0 – none; 1 –shallow (wide) groove; 2 - deep (strait) groove.
5. Hinge type: 0 – lophodont; 1 – inverse lophodont.
6. Anterior cardinal tooth: 0 – lamellar; 1 – globular.
7. Posterior cardinal tooth: 0 – long, lamellar; 1 – short straight, lamellar; 2 – short, slightly curved; 3 – short, globular.
8. Intercardinal sulcus: 0 – straight; 1 – anterior half enlarged (deeper), posterior part straighter (shallower).
9. Anterior sulcus: 0 – none; 1 – present.
10. Pseudosulcus: slight medio-dorsal depression on the adult female valve (without an imprint on the internal side of the valve): 0 – none; 1 – present.
11. On the internal side of the valve the location of the ventro-posterior margin: 0 – parallel to the outer margin; 1 – inwardly located.
12. Carapace shape laterally viewed: 0 – approximate rectangular; 1 - approximate round sub-ovate; 2 – elongate sub-ovate.
13. Female carapace dorsally viewed: 0 – narrow more similar to the anterior third; 1 – enlarged.
14. Intercardinal groove on the dorsal margin of the valve: 0 – long; 1 – short.

Table II. - Morphological traits of the valves for nine Timiriaseviinae genera (ingroup) compared to those of Limocytherinae (outgroup). Character types: 1, 4-11, 13 irreversible up; 2, 3, 12 unordered; 14 ordered.

Taxa/Morph. traits (Nr.-see Character types)	1	2	3	4	5	6	7	8	9	10	11	12	13	14
Timiriasevia	1	3	01	0	0	0	1	0	0	0	0	1	1	0
Metacypris	1	01	0	0	01	0	01	0	0	01	1	01	1	01
Vecticypris	1	0	0	0	0	0	0	0	0	0	1	1	1	0
Sinuocythere	1	012	013	0	0	0	0	0	0	1	0	2	1	0
Kovalevskiella	1	4	2	2	1	0	23	0	0	0	1	0	1	1
Rosacythere	1	5	012	1	1	1	23	0	0	0	0	0	1	1
Frambocythere	1	4	2	2	1	0	23	0	1	0	1	0	1	1
Abrotocythere	1	2	3	1	0	0	3	1	0	0	1	0	1	1
Dolekiella	1	2	0	0	0	0	3	1	0	1	0	0	1	1
Limnocytherinae	01	12	03	12	0	0	0	0	01	0	0	0	0	1

species, *Abrotocythere* 2 species, *Kovalevskiella* 3 species (Colin & Danielopol 1980, Tambareau 1984, Carbonel *et al.* 1986, Zhao 1987a, b, Tambareau *et al.* 1991, Colin 1993, Babinot *et al.* 1996, Colin & Carbonel 1996, Colin & Dépêche 1997, Cabral & Colin 1998, Whatley *et al.* 2002).

The geographic distribution of the lineage *Dolekiella-Abrotocythere* is remarkable, respectively one living species located in the southern Europe in the Roussillon plain near the Pyrenees (with extended limestone areas) and the two fossil species found in the south western China in the Guizhou province (Zhao 1987a). This latter area is well known for its karstic plateau-canyon type, developed under humid and hot climatic conditions (Zhang Zhi gan 1980). The karstified Devonian limestone of the Pyrenees (the "calcaire griotte") shows some similarities with those existing in China (M Bakalowicz pers comm to DLD). The karstification could have started already during the hot humid climate of the second part of the Mesozoic when those terrains were emerged and on which a diversified limnic fauna of ostracods, including Timiriaseviinae, flourished (Babinot *et al.* 1996). Therefore representatives of *Dolekiella* and/or allied groups could have colonised subsurface waters since a very long time, starting with the Middle Jurassic or during the Cretaceaous. This hypothesis is in line with views of other carcinologists (e.g. Coineau 1994, Coineau *et al.* 2006) who consider the settlement in subterranean waters of various micro-crustaceans, to have occurred in south-western Europe during the end of the Mesozoic and/or during the beginning of the Tertiary (e.g. the Eocene). Interestingly enough the subsurface habitats at Calmeilles and Millas where *Dolekiella europaea* occurs are partly fed by water which comes from two mini-karst systems (*cf* Aunay *et al.* 2006).

Two additionally arguments give credibility to the possibility of an early colonisation by Timiriaseviinae of the south-western Europe (around the area where we find now *Dolekiella*): (1) A new Timiriaseviinae species of an undescribed genus was sampled in 1985 by J Gibert in the cave Tham Klaeb in northern Thailand, near Chiang Mai. The unique female we examined has a pigmented eye and

apparently is an epigean or troglophilic species, therefore even now under subtropical conditions timiriaseviines are able to colonise subterranean habitats in karstic areas. (2) One of us (JPC) noticed that the minute "*Bisulcocypris*" *pusilla* Rohr, 1976 (representing a new undescribed Timiriaseviinae genus) occurs in Middle Jurassic lagoonal carbonates which were subsequently karstified in the Grands Causses, southern France (Rohr 1976) and in the Nura region, Sardinia (Maltz *et al.* 1985). Therefore epigean timiriaseviines could have already migrated into the hypogean realm starting already in the Middle Jurassic.

ACKNOWLEDGEMENTS. – We are much indebted to the colleagues involved with the EC-Project PASCALIS who helped during the sampling and the processing of the ostracods studied here, inter alia A Bedos, C Boutin, N Coineau, N Giani, L Deharveng. The work of MA was mainly funded by the PASCALIS programme (Grant EVK-2001-00086). Special thanks to J Gibert, the leader of this project, who also offered comparative material and information concerning Timiriaseviinae ostracods. One of us (DLD) got financial support from the Austrian Science Foundation (Grant FWF P17738-BO3). He acknowledges also the financial support of the CNRS for the participation to the PASCALIS meeting 2004 in Lyon. Discussion and further information offered by M Bakalowicz, P Carbonel, DJ Horne, K Martens and RJ Smith are here acknowledged. Dr W Krautgartner (Univ Salzburg, Inst of Zoology) produced the SEM microphotographs used and G Cucu and M Pichler helped with the graphics and figures. A Baltanás and N Coineau improved various typescript mistakes made by one of us (DLD). We acknowledge additionally the permanent support of N Coineau during the completion of this project. Finally, the comments and suggestion for improvement of three reviewers are also appreciated.

REFERENCES

Artheau M 2006. La faune aquatique souterraine du Roussillon et du bassin de l'Aude. Diversité, répartition et approche taxonomique. Doctoral thesis Univ Paul Sabatier Toulouse 3.

Aunay B, Duvail C, Giordana G, Doerfliger N, Le Strat, Montginoul M & Pistre S P 2006. A pluridisciplinary methodology for integrated management of a coastal aquifer. Geological, hydrological and economic studies of the Roussillon aquifer (Pyrénées-Orientales, France). *Vie Milieu* 56 (4): 275-285

Babinot JF, Colin JP, Tambareau Y 1996. Late Cretaceous nonmarine ostracods from Europe: biostratigraphy, palaeobiogeography and taxonomy. *Cretac Res* 17: 151-167.

Cabral MC, Colin JP 1996. Nouvelles espèces de Limnocytheridae (Ostracodes limniques) dans l'Aptien du Portugal: systématique et paléoécologie. *Rev Micropal* 41: 269-279.

Carbonel P, Colin JP, Danielopol DL, Londeix L 1986. *Kovalevskiella* (Ostracoda, Timiriaseviinae), genre à mode de vie benthique depuis l'Oligocène, son adaptation à la vie interstitielle. *Geobios* 19: 677-687.

Colin JP 1993. An early representative of the genus *Frambo - cythere* Colin, 1980: *Frambocythere pustulosa* (Grekoff, 1957) from the Albian of Zaire. *J Micropal* 12: 170.

Colin JP, Carbonel P 1996. Middle Jurassic record of the limnic ostracode genus *Rosacythere* (Limnocytheridae, Timiriaseviinae): implications on the origin and evolution of the *Kovalevskiella* group. *J Micropal* 5: 187-191.

Colin JP, Danielopol DL 1980. Sur la morphologie, la systématique, la biogéographie et l'évolution des ostracodes Timiriaseviinae (Limnocytheridae). *Paléobiol Cont* 11: 1-51.

Colin JP, Dépêche F 1997. Faunes d'Ostracodes lacustres des bassins intra-cratoniques d'âge albo-aptiens en Afrique de l'Ouest (Cameroun, Tchad) et au Brésil : considérations d'ordre paléoécologique paléobiogéographique. *Africa Geosci Rev* 4 : 431-450.

Colin JP, Cabral MC, Dépêche F, Mette W 2000. *Sinuocythere* n. gen. (Ostracoda, Limnocytheridae, Timiriaseviinae), a new genus of limnic ostracode from southern Tethyan Middle and Upper Jurassic. *Micropaleontology* 46: 123-134.

Coineau N 1994. Evolutionary biogeography of the microparasellid isopod *Microcharon* (Crustacea) in the Mediterranean basin. *Hydrobiologia* 287: 77-94.

Coineau N, Artheau M, Boutin C 2006. Origin of the interstitial isopod *Michrocharon* (Crustacea, Microparasellidae) from the Western Languedoc and the northern Pyrenees (France). *In* Artheau M, La faune aquatique souterraine du Roussillon et du bassin de l'Aude. Diversité, répartition et approche géographique. Doctoral thesis Univ Paul Sabatier Toulouse 3: 219-240.

Horne DJ, Cohen A, Martens K 2002. Taxonomy, morphology and biology of Quaternary and living Ostracoda. *In* JA Holmes, AR Chivas Eds, The Ostracoda: Applications in Quaternary Research, Geophysical Monograph 131: 5-36, AGU, Washington DC.

Karanovic I 2003. The genus *Kovalevskella* Klein, 1963 (Crustacea, Ostracoda, Limnocytheridae) from the ground waters of Greece, with description of *Kovalevskiella dani* sp. nov. and a key to world recent species. *Spixiana* 26: 227-242.

Karanovic I 2006. On the genus *Gomphodella* (Crustacea, Ostracoda, Limnocytheridae) with description of three new species from Australia and redescription of the type species. *Species Div* 11: 99-135.

Löffler H, Danielopol DL 1978. Ostracoda. *In* Limnofauna Europaea, J Illies Ed, Gustav Fischer Verlag, Stuttgart: 196-208.

Malz H, Hoffman K, Radtke G 1985. Biostratigraphy of the middle Jurassic of NW Sardinia by means of ostracods. *Senckenb Lethaea* 66: 299-345.

Martens K 1990. Revision of African *Limnocythere* s.s. Brady, 1867 (Crustacea, Ostracoda) with special reference to the Rift Valley Lakes: morphology, taxonomy, evolution and (palaeo-) ecology. *Arch Hydrobiol* Suppl 83: 453-524.

Martens K 1995. On the validity and the taxonomic position of the Cytheridellini (Crustacea, Ostracoda, Limnocytheridae). *Mitt Hamburg Zool Mus Inst* 92: 273-280.

Meisch C 2000. Freshwater Ostracoda of Western and Central Europe. Spektrum Akad Verlg Heidelberg.

Rohr WM 1976. Mitteljurassische Ostracoden aus den Grands Causses Süd-Frankreichs. Inaugural Dissertation, Freie Univ Berlin.

Smith RJ, Hiruta S 2004. A new species of *Metacypris* (Crustacea, Ostracoda, Cytheroidea, Limnocytheridae) from Hokkaido, Japan. *Species Div* 9: 37-46.

Swofford DL 1998. PAUP Phylogenetic Analysis Using Parsimony (and other methods). Version 4, Sinauer Associates, Sunderland MA.

Tambareau Y 1984. Les Ostracodes du "Montien continental" de Hainin, Hainot, Belgique. *Rev Micropal* 27: 144-156.

Tambareau Y, Gruas-Cavagnetto C, Feist M, Villatte J 1991. Flores et faunes continentales illerdiennes du versant sud de la Montagne Noire et de la Montagne d'Alaric. *Rev Micropal* 34: 69-89.

Whatley CR, Moguilevsky A 1997. The origins and early evolution of the Limnocytheridae (Crustacea, Ostracoda). *Bull Centre Rech Elf Explor Prod Mém* 20: 271-285.

Whatley CR, Bajpai S, Srinivassan S 2002. Upper Cretaceous nonmarine Ostracoda from Intertrappean horizons in Gulbarga District, Karnataka State, South India. *Rev Esp Micropal* 34: 163-186.

Zhang Zhi gan 1980. Karst types in China. *GeoJournal* 4: 541-570.

Zhao Y 1987a. On *Abrotocythere quinquicornis* Zhao gen. et sp. nov. *Stereo-Atlas Ostracod Shells* 14: 111-114.

Zhao Y 1987b. On *Abrotocythere ovata* Zhao sp. nov. *Stereo-Atlas Ostracod Shells* 14: 115-118.

Received November 5, 2006
Accepted December 11, 2006