GROUPE RENAULT

INTERNATIONAL CONFERENCE ON MOBILITY CHALLENGES

« WIRELESS CHARGING SYSTEM FOR AN IN-MOTION EV »

PhD student: Wassim KABBARA
Cifre contract: GeePs - Renault
3rd year

Thesis Director: Mohamed BENSETTI
Co-supervisor: Tanguy PHULPIN
Co-supervisor: Daniel SADARNAC

Industrial Tutor: Antoine CAILLIEREZ
Industrial co-Tutor: Serge LOUDOT

AGENDA

01 INTRODUCTION
- EV – KEY LIMITATIONS
- POSSIBLE SOLUTIONS
- IN-MOTION CHARGING

02 DYNAMIC INDUCTIVE POWER TRANSFER (DIPT)
- PRINCIPLE
- CHALLENGES
- TEST TRACKS

03 THESIS WORK
- SCOPE
- METHODOLOGY
- SIMULATION RESULTS
- EXPERIMENTAL TEST BENCHES

04 CONCLUSIONS & PERSPECTIVES

01

INTRODUCTION

ELECTRIC VEHICLES – KEY LIMITATIONS

- Range
  - Energy density of a lithium-ion battery is limited between 100 & 243 $\frac{Wh}{kg}$.
  - 12889 $\frac{Wh}{kg}$ for gasoline; 34100 $\frac{Wh}{kg}$ for hydrogen (compressed at 700 bars)

- Recharging time
  - Limited by the charging power used
    - Limited by thermal constraints

POSSIBLE SOLUTIONS

Bigger Batteries

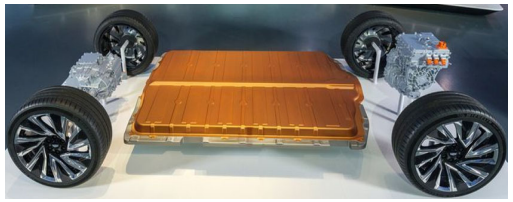

General Motors concept reveal in 2020:
200 kWh Li-Battery (800 volts, 350 kW charging)

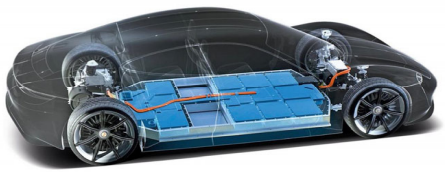

Porsche Taycan 2022 : 93 kWh Li-Battery
(800 volts, 270 kW charging)

€€€ cost/EV
€€€ production & recycling CO_2/EV

Hybridization: HEV/PHEV

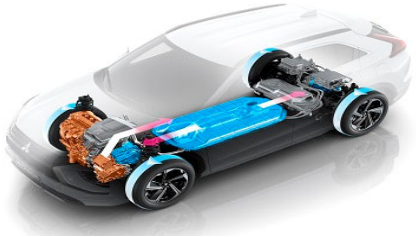

Mitsubishi Eclipse Cross PHEV 2022

Fossil fuel dependency

Hydrogen Fuel cell

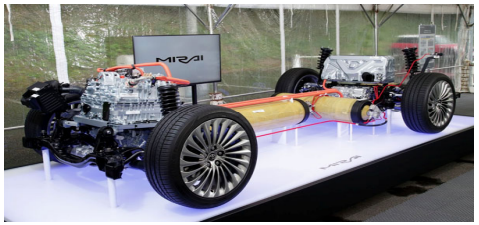

Toyota Mirai 2022 Hydrogen (600km range)

Overall efficiency problem

In-Motion Charging

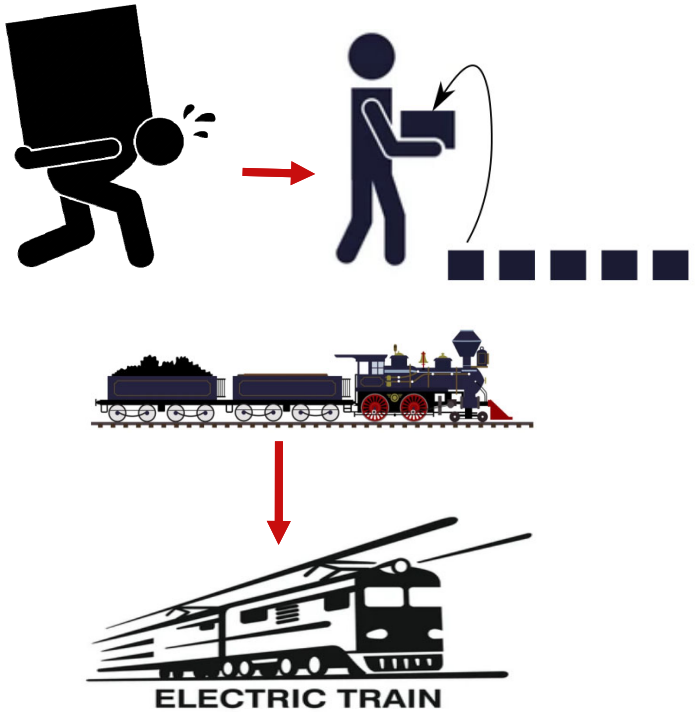

ADVANTAGES OF IN-MOTION CHARGING

Smaller Batteries

Continuous Operation

Lower production/recycling carbon footprint per vehicle

No need for dedicated charging stations

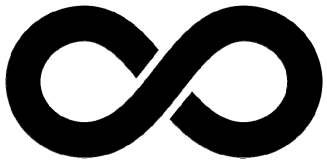

Unlimited range

IN-MOTION CHARGING SOLUTIONS

Sliding contact

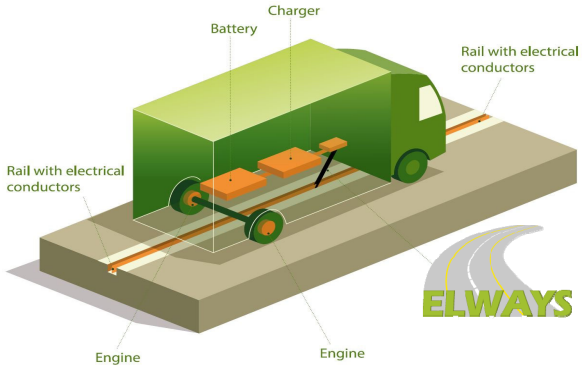

Overhead Catenary Technology

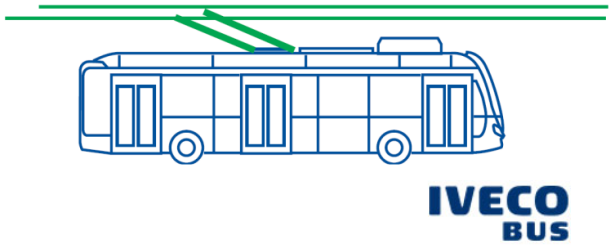

Inductive wireless charging

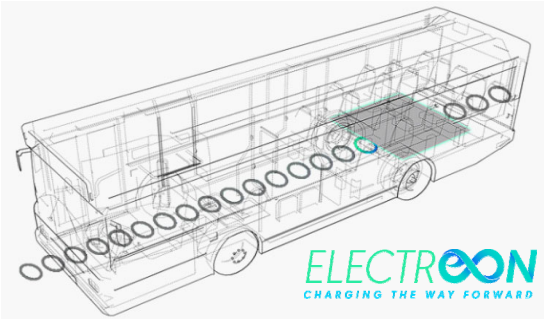

02

DYNAMIC INDUCTIVE POWER TRANSFER (DIPT)

THEORY

$$k_{in\rightarrow out} = \frac{\Phi_{tr}}{\Phi_{in}}$$

$$V_{out}|_{Iout=0} = V_{in} * k_{in\rightarrow out}$$

* Valid for symmetrical transformers

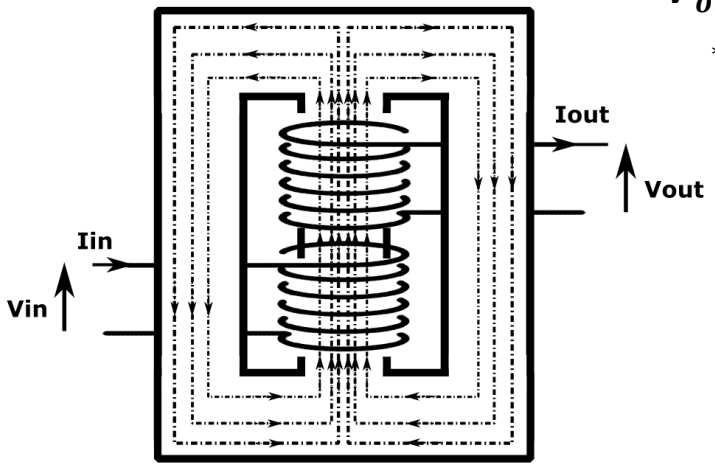

Tightly Coupled Transformer

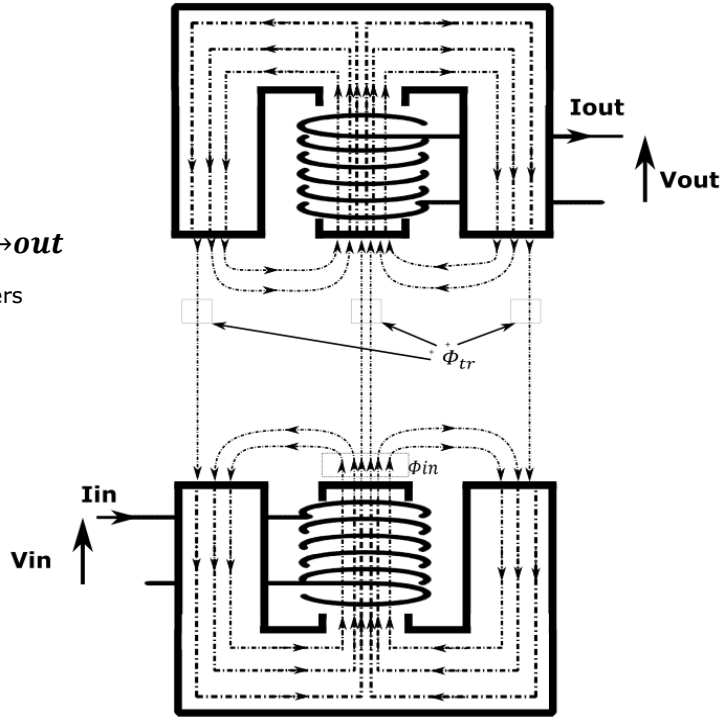

Loosely Coupled Transformer

MODEL OF AN IPT SYSTEM

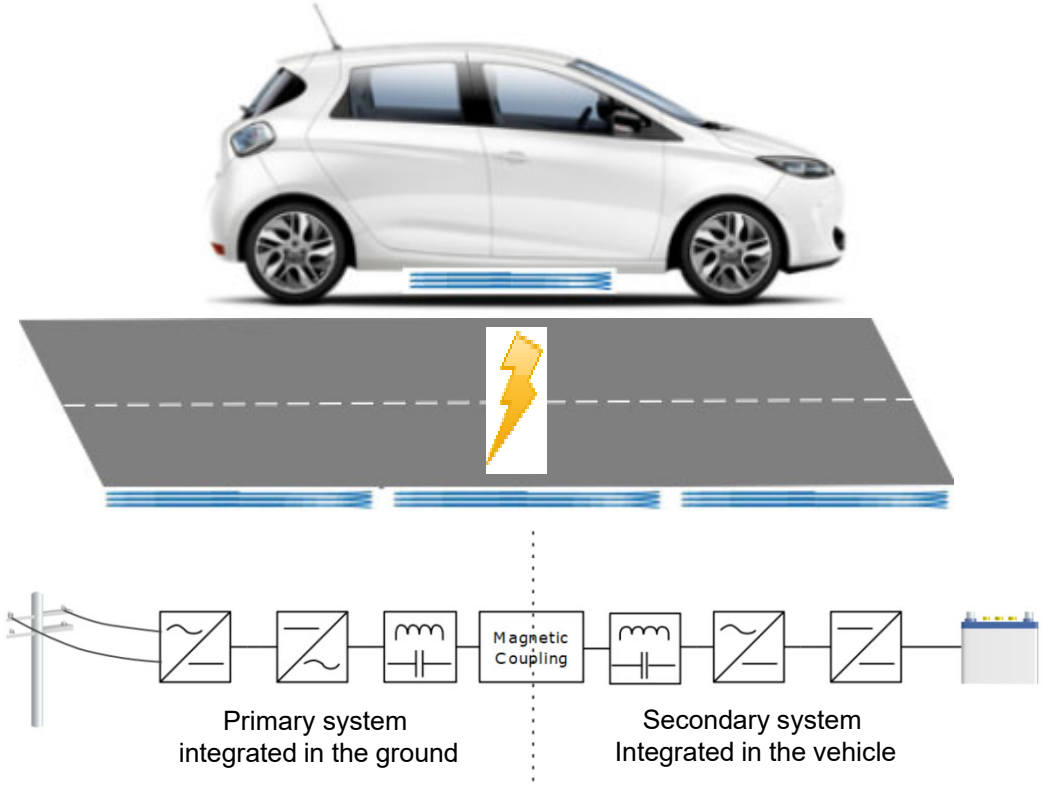

CHALLENGES TO OVERCOME IN DYNAMIC INDUCTIVE CHARGING

- Detection & Initialization
- Power Control
- Sequencing
- Termination
- Generic System!
- Compliant System
- …

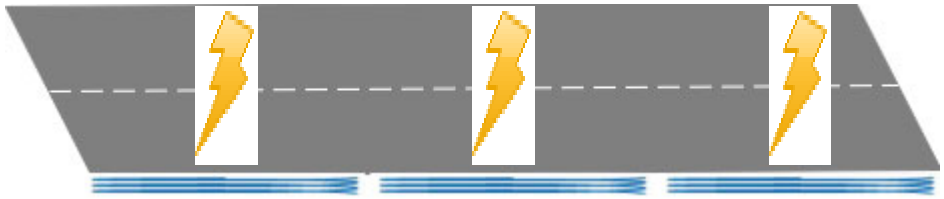

TEST TRACKS: EUROPE

Dynamic Inductive Power Transfer

1. DRIVE FLANDERS
2. FAST IN CHARGE
3. eCO-FEV
4. Slide-in (Primove)
5. FABRIC
6. INTIS

Scientific publication

Patent publication

TEST TRACKS: FABRIC Feasibility analysis of on-road charging technologies

Date: Jan 2014 – Dec 2017

Main actor: Vedecom, KTH

Location: France / Italy / Sweden

Partner: CEA (France), Enide Solutions, SL – ENIDE (Spain), Forschungsgesellschaft Kraftfahrwesen mbH Aachen (Germany), Fundación CIRCE (Spain), Institute of Communication and Computer Systems (Greece), Politecnico di Torino (Italy), TNO (The Netherlands), Volvo Technology AB (Sweden), CRF - Centro Ricerche Fiat (Italy), TRL Limited (UK), SAET Spa (Italy), Qi Energy Assessment SL (Spain), SANEF (France), Associazione Tecnica dell'Automobile Consulting & Solutions SRL (Italy), Fondation partenariale Mov'eo TEC (France), Scania CV AB (Sweden), Technositaf Spa (Italy), Mect SRL (Italy), Kungliga Tekniska Hoegskolan (Sweden), Iren Energia Spa (Italy), Applied Mechatronic Engineering & Technologies SRL (Italy), European Road Transport Telematics Implementation Coordination Organisation - ERTICO (Belgium), Institut VeDeCoM, Universita Degli Studi di Genova - UNIGE-DITEN (Italy)

Scientific publications: 3

DOI: 10.1016/j.conbuildmat.2017.04.149

DOI: 10.1080/10298436.2017.1279487

OAI:DiVA.org:kth-195592

Patent publication: EP3182550 , WO2017081382 (Renault), Qualcomm Halo

Technology: 4 technologies:

- Vedecom/Qualcomm solution - Qualcomm Halo™ wireless electric vehicle charging technology (WEVC)
- Polito solution: 20-200kHz , 20kW, reuse from eco-Fev
- Saet solution: 80-100kHz, 50kW
- Volvo conductive solution, reuse from Slide-in charge

Budget :

- Cost: >9ME
- EU Contribution: 6.5M€

Test site / Demonstrators: Vehicles: Passenger cars, Trucks, Delivery vans

- France, Satory near Versailles
  - » 100m long
  - » 20kW at 85kHz up to 120 km/h (20cm air gap)
  - » 2 vehicles powered simultaneously
- Italy, Susa near Turin
  - » 200m long
  - » Polito solution: 20-200kHz , 20kW (20cm air gap)
  - » Saet solution: 80-100kHz, 50kW (20cm air gap)
- Swedeen, Hällered near Goteborg
  - » Aesthetic Power Supply technology (conductive)

TEST TRACKS: AMERICA & ASIA

Dynamic Inductive Power Transfer

1. **EVR** – Electric Vehicle & Roadway
2. **CRADA Project**
3. **KAIST**
4.
5. 中国南方电网 CHINA SOUTHERN POWER GRID 广西电网公司
6.

Scientific publication

Patent publication

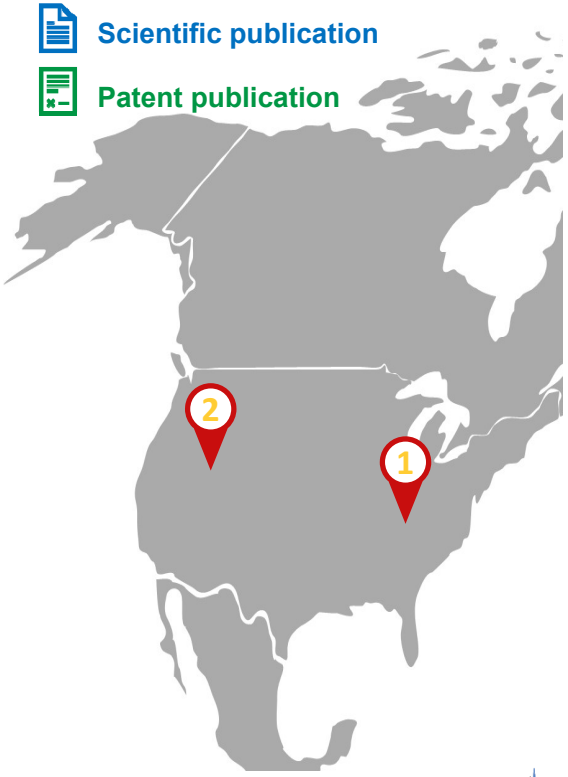

03

THESIS WORK

OBJECTIVES OF THE THESIS

- Proposition of control strategies for multiple input multiple output (MIMO) dynamic inductive power transfer (DIPT) systems in electrical vehicles applications (light vehicles, SUVs, trailer vehicles…)

- Study & minimization of the radiated magnetic field using original coil structures with shielding (Alu. + Ferrites)

1 PRIMARY – 1 SECONDARY CONFIGURATION

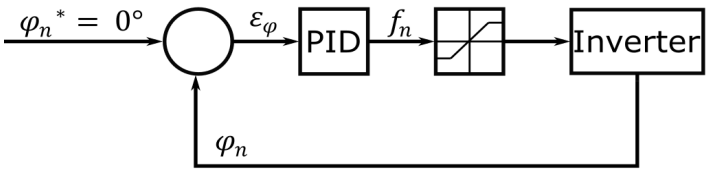

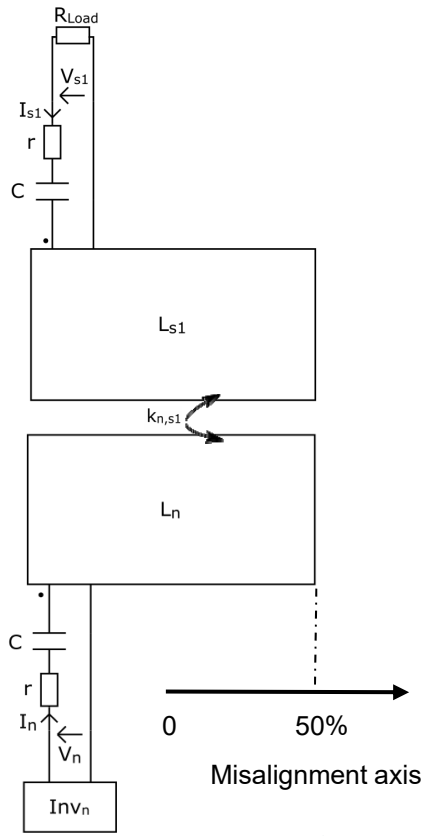

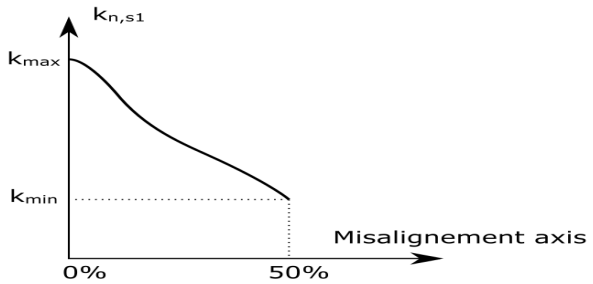

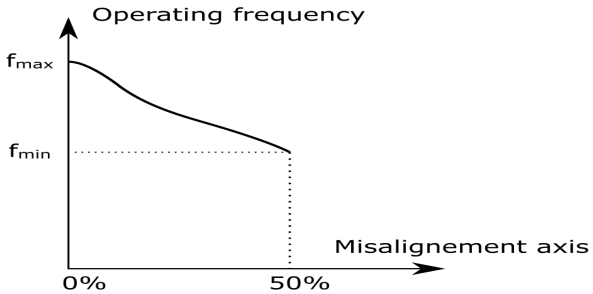

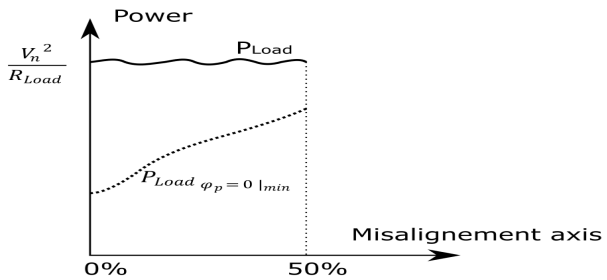

3 PRIMARY – 1 SECONDARY CONFIGURATION

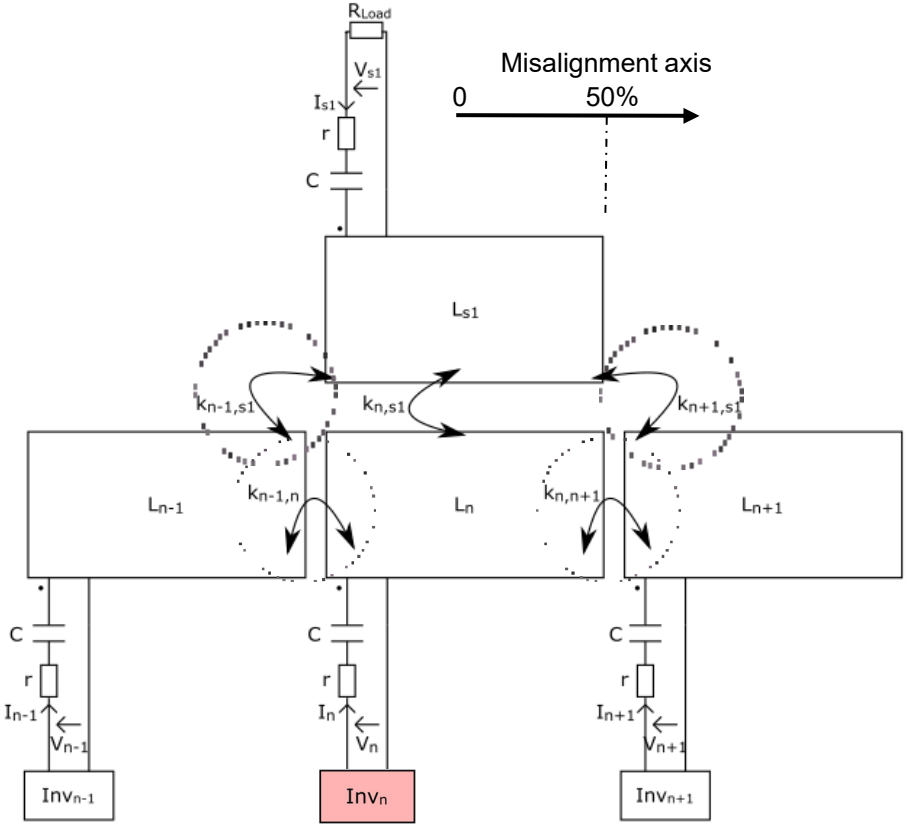

Inv Active

4 PRIMARY – 2 SECONDARY CONFIGURATION

- Is it obligatory to operate Inv_n & Inv_{n+1} at the same synchronized frequency?
- If yes, at what frequency?

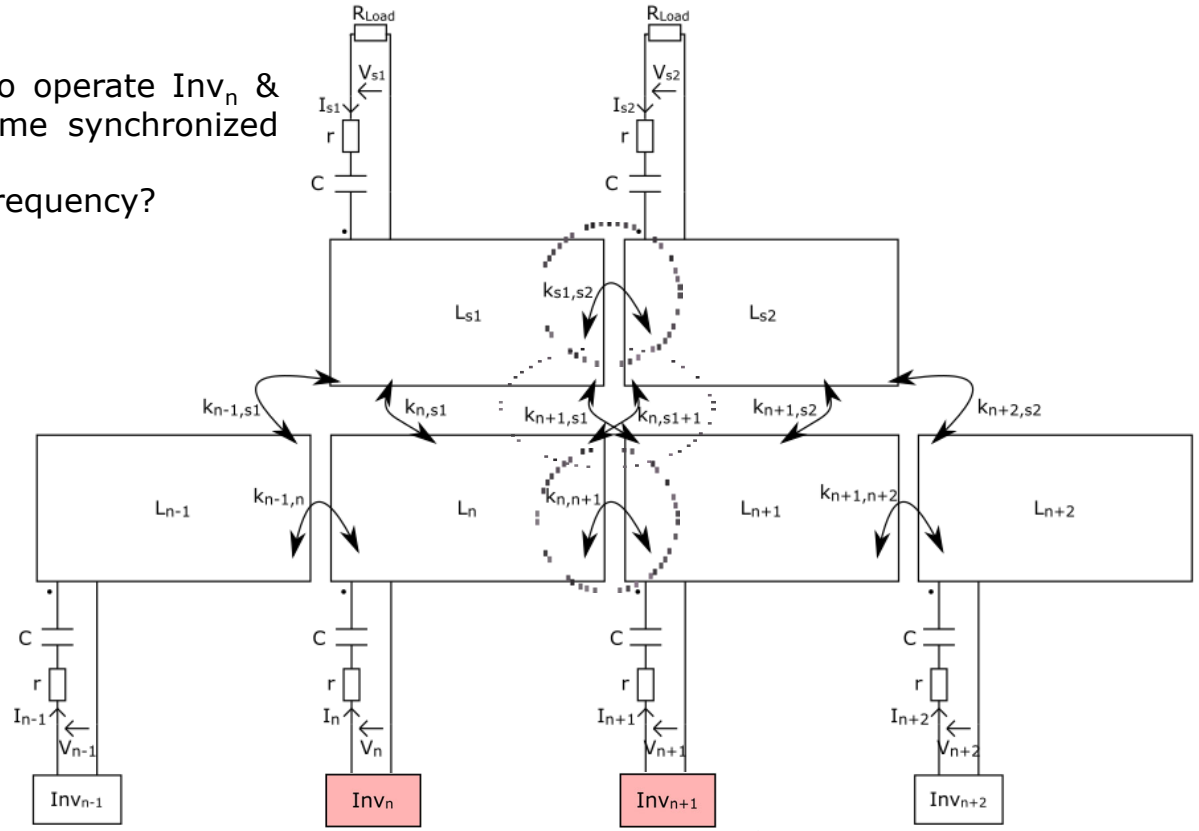

Inv Active

4 PRIMARY – 2 SECONDARY SIMULATION RESULTS

Simulation of a 2,5kW system moving from -50% to +50% misalignment at 70 km/h:

- Independent frequencies *To be avoided!*

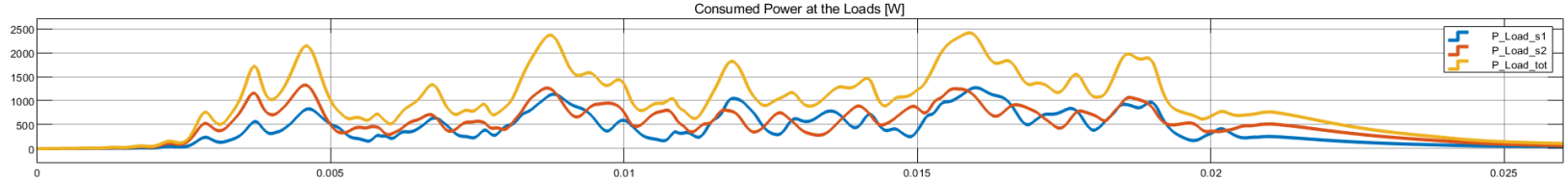

Time [s]

- Identical frequencies (Imposed by a Master Slave) without Synchronization *To be avoided!*

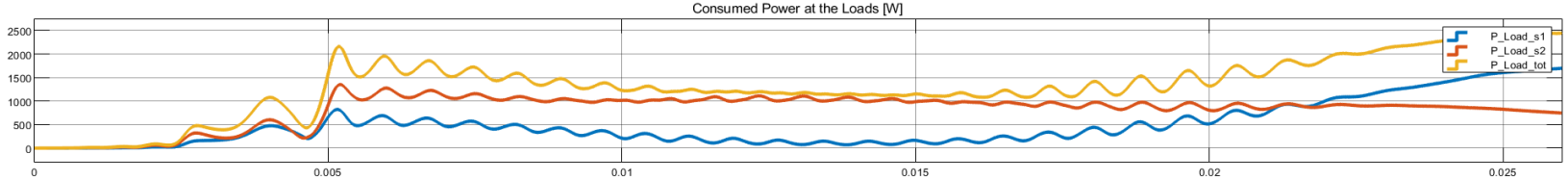

Time [s]

- Identical frequencies (Imposed by a Master Slave) with Synchronization ☺

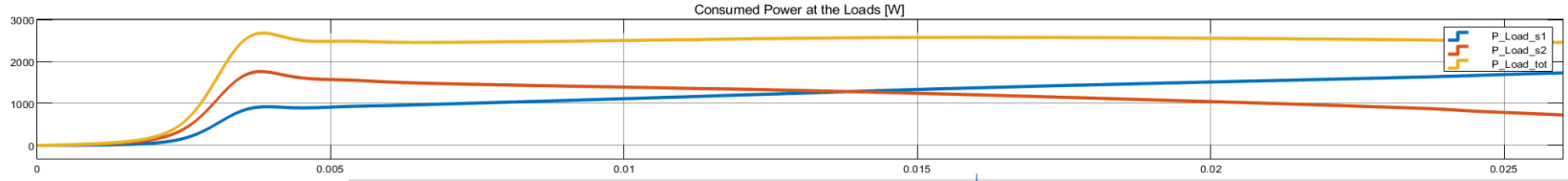

Time [s]

5 PRIMARY – 3 SECONDARY SIMULATION RESULTS

Simulation of a 90 kW system moving from position A -> B :

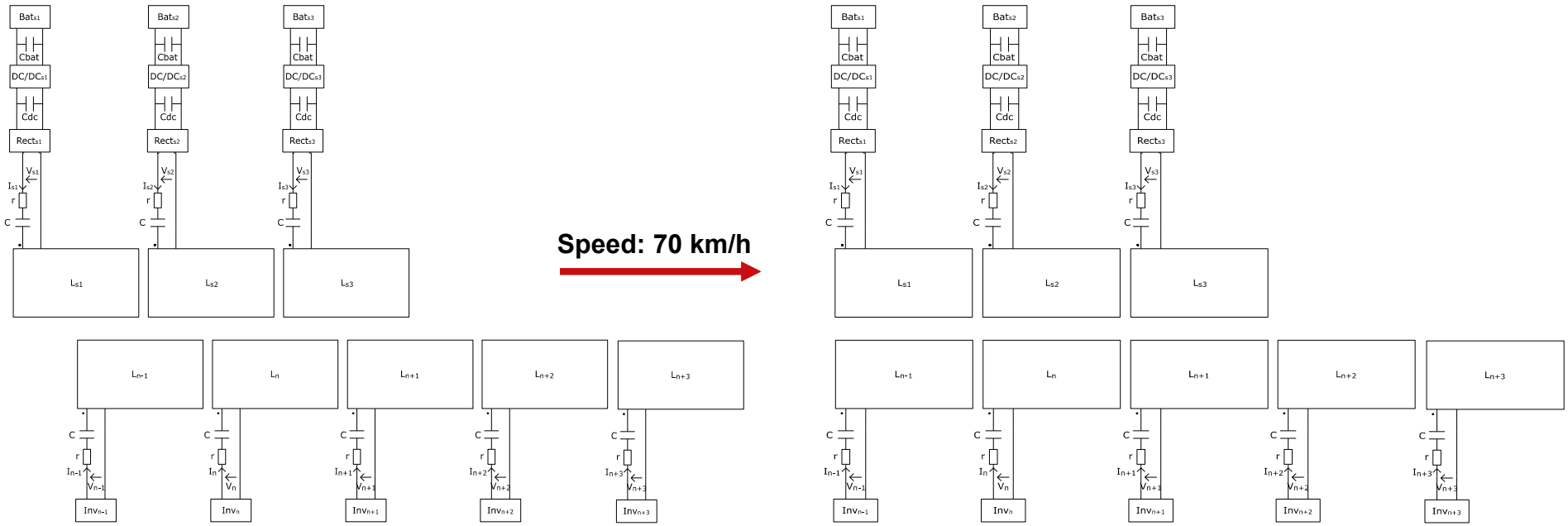

Position A

Distance covered: 389 mm
Total time : 0,02 s

Position B

5 PRIMARY – 3 SECONDARY SIMULATION RESULTS

Primary 2 is the Master – Primary 1&3 are slaves

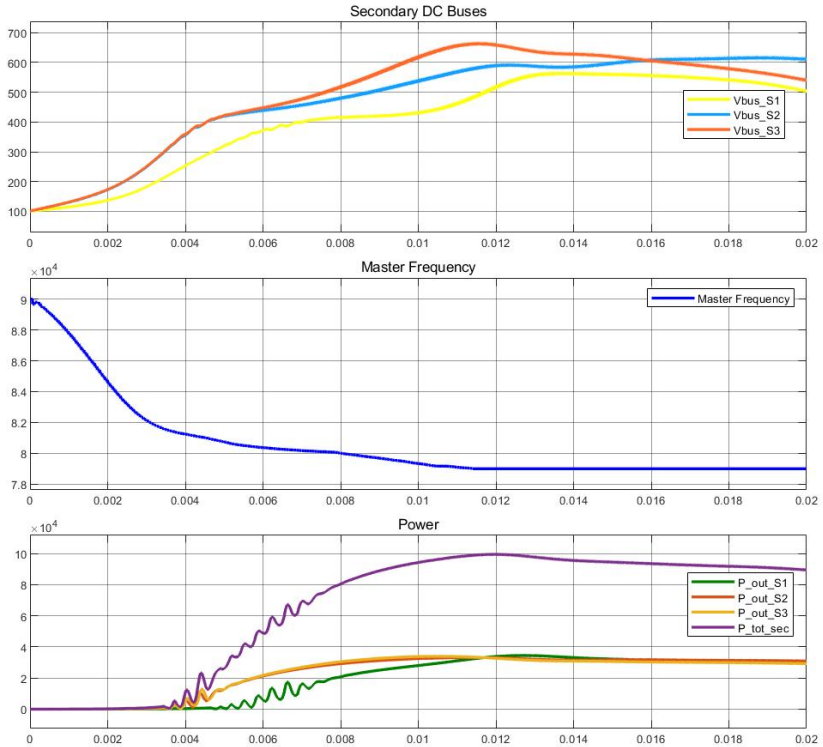

Time [s]

Operating at unique Master frequency however un-identical primary phases…

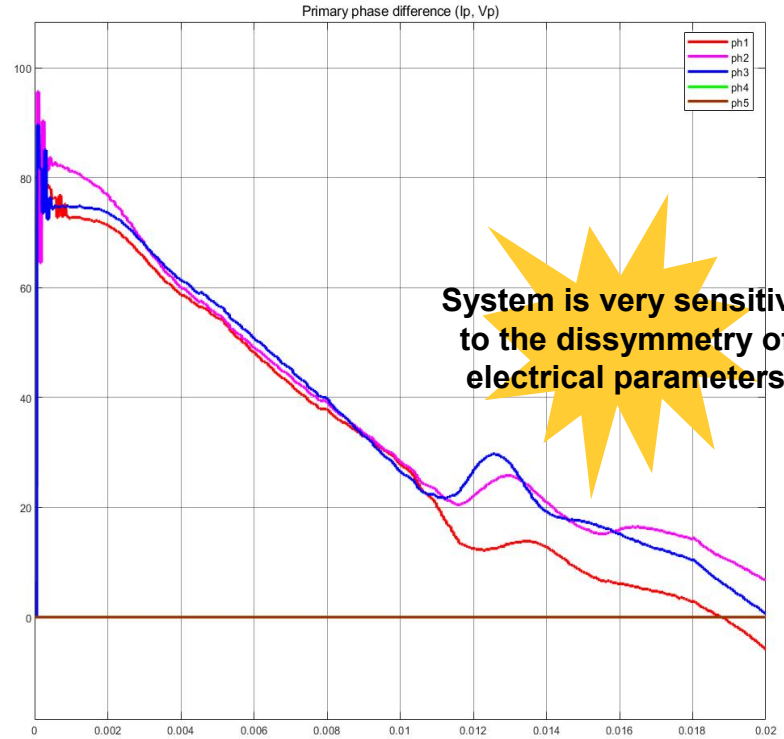

System is very sensitive to the dissymmetry of electrical parameters

Time [s]

NEW TOPOLOGY

Standard Solution

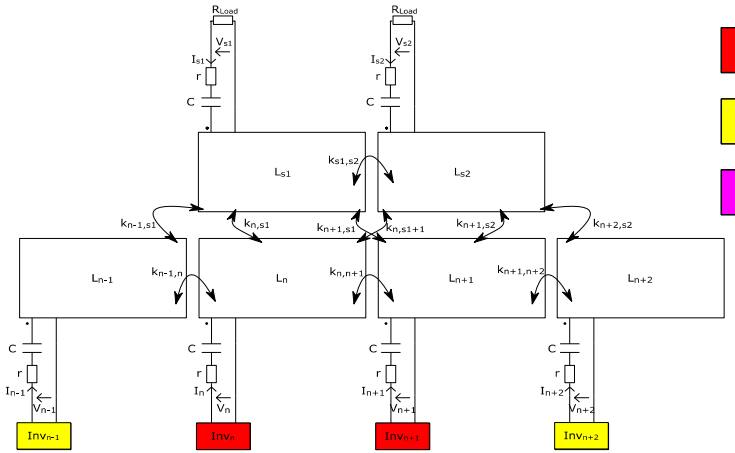

Inv Active

Inv Short-Circuited

Inv Open-Circuited

System is very sensitive to the dissymmetry of electrical parameters

Patented Solution

System is robust

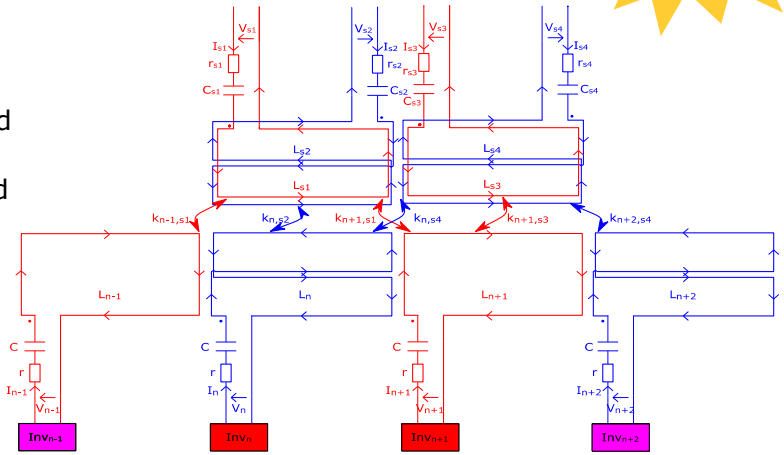

Objective : Transform a complex MIMO system → Multiple independent SISO systems

- No need for synchronization between active transmitters
- Operating at independent frequencies is possible
- Operating at open-circuit mode for neighboring inactive transmitters

EXPERIMENTAL TEST BENCHES

Modeling & Simulations :

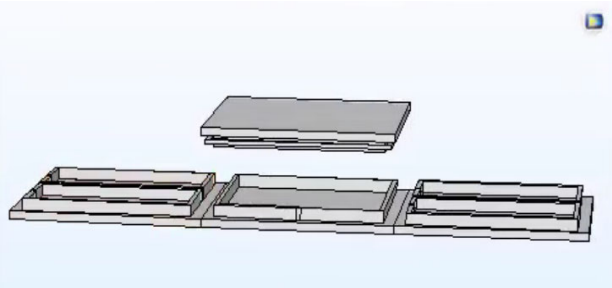

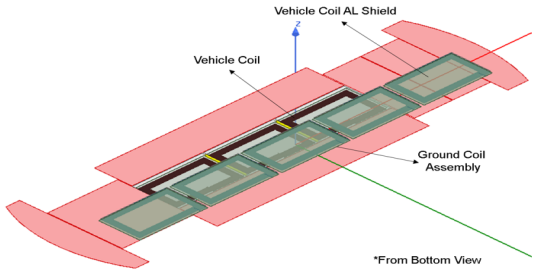

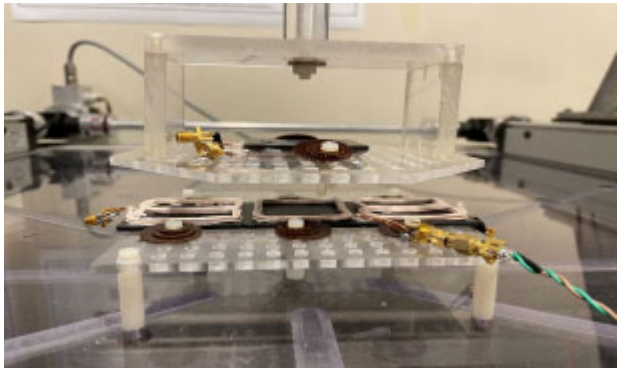

Test Bench- 1/10 scale

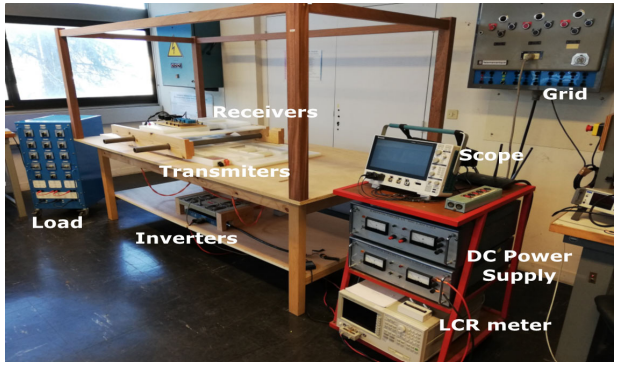

Test Bench- 2kW power per module

Test Bench- 30kW power per module

04

CONCLUSIONS & PERSPECTIVES

PERSPECTIVES

Experimental Validation of the proposed control strategies for MIMO DIPT systems in EV applications:

- Bench test at 2kW in GeePs (Impedance analyzer, Oscilloscope, SMP2 for EM radiation measurements…)
- Application on the European project INCIT-EV (WP3-Direct collaboration with Vedecom & Circé)
  - 30kW DIPT system in a Renault ZOE & 90kW DIPT system in a Renault MASTER

Bench test built at GeePs with 4 primary coils and 2 secondary coils configuration - 2kW power per module

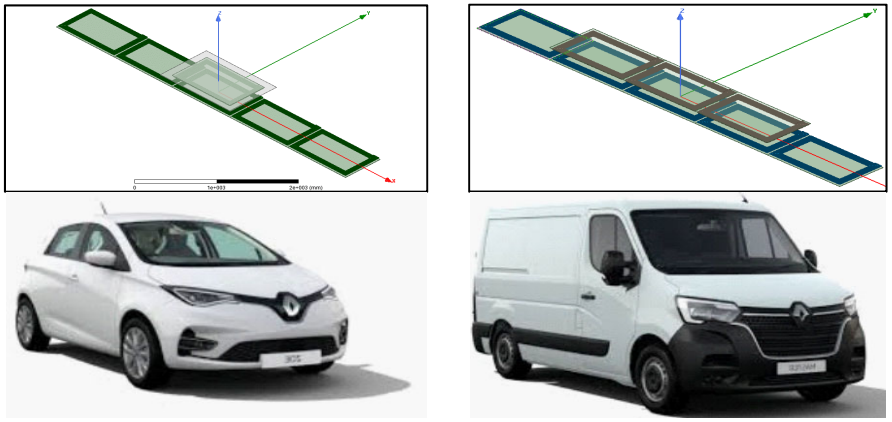

European project INCIT-EV for integrating 30kW DIPT system in a ZOE and a 90kW system in a Master (Testing phase planned in 2022)

THANK YOU

ANNEX

HIGHWAY COILS COVERAGE

- 75% of a highway should be covered with coils with 9.28 kW peak power
- With 100 kW power transfer, only 7.5% of the roadway should be equipped with DIPT systems

OAK RIDGE NATIONAL LABORATORY
MANAGED BY UT-BATTELLE FOR THE US DEPARTMENT OF ENERGY

RÉGULATIONS ET STANDARDS (1)

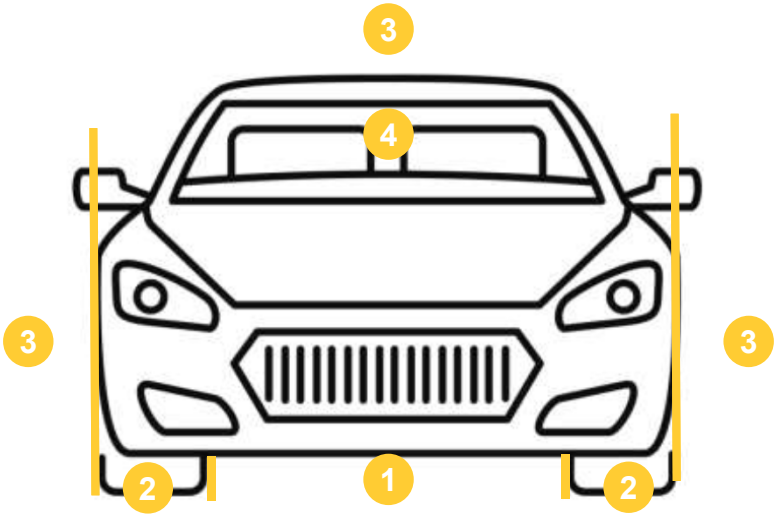

Fig.12 SAE RP J2954 Différents zones du véhicule

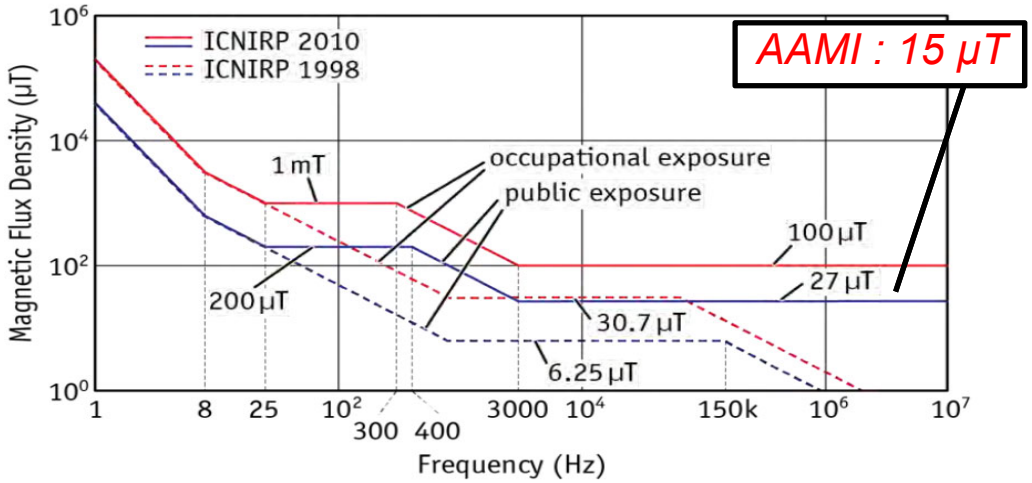

Fig.13 ICNIRP 1998/2010 Reference pour valeur de $\| \vec{B}_{eff} \|$ dans zone 3 et 4

- Zone 1 : Zone de transfert d'énergie
- Zone 2 : Zone de transition
- Zone 3 : Zone accessible au publique autour du véhicule
- Zone 4 : Habitacle véhicule

Pas de limite dans les zone 1 et 2 sous conditions :

- Contrôle d'accès actif ou passif (Zone 1)
- Détecter et arrêter (Zone 2)

RÉGULATIONS ET STANDARDS (2)

- Les standards internationaux actuels traitent le WPT en **statique**
  - SAE J2954/1, ISO 19363 IEC 61980 …
  - 3 niveaux de puissance :
    - P < 3kW
    - 3kW < P < 7kW
    - 7kW < P < 11kW
  - Interopérabilité
  - Dispositifs de sécurité
    - Foreign object detection, living object protection …

- Pas de standard traitant actuellement du WPT en **dynamique**
  - Projet en cours : IEC 63243
    - First-draft devrait être rédigé d'ici la fin de l'année.

The maximum field at observation point is within ICNIRP guideline limit of 38.2uT

Observation Point

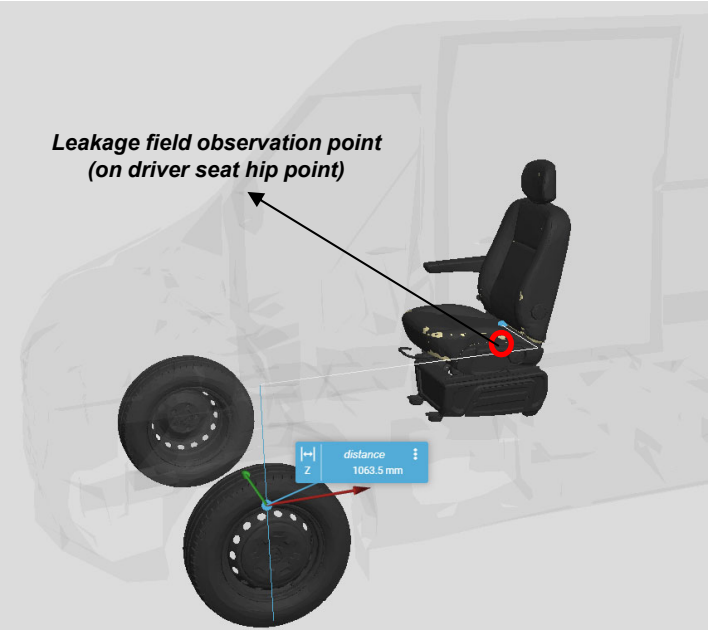

<u>SAE & ICNIRP 2010 Guideline :</u>
Required leakage field limitation is
- **38.2 µT peak for general public &**
- **21.2 µT peak for pacemaker people**

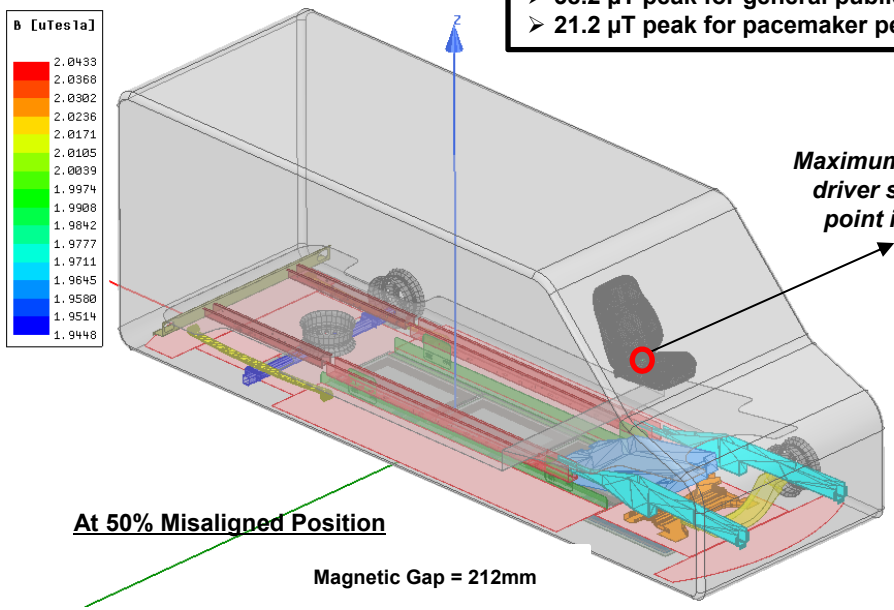

Maximum field on driver seat hip point is 2 µT

<u>At 50% Misaligned Position</u>

Magnetic Gap = 212mm

Leakage field outside vehicle with shielding…(1)

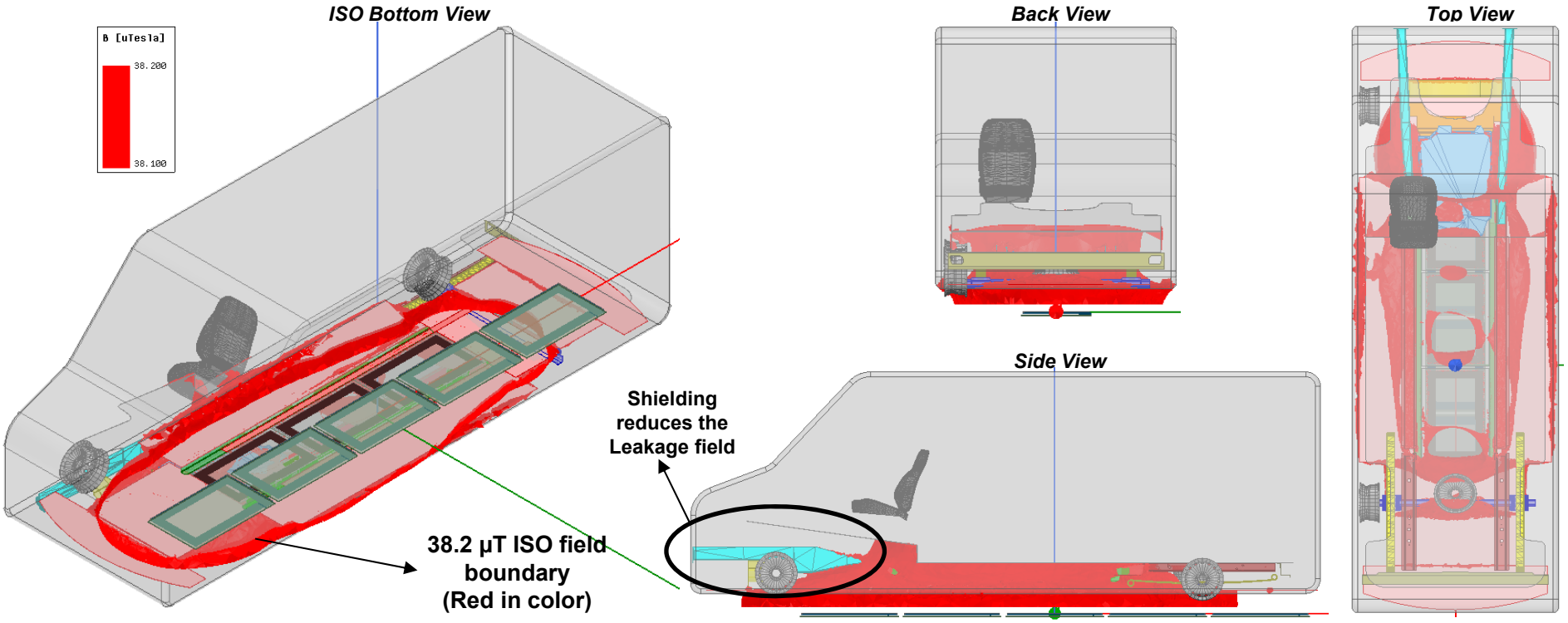

Leakage field outside vehicle with shielding…(2)

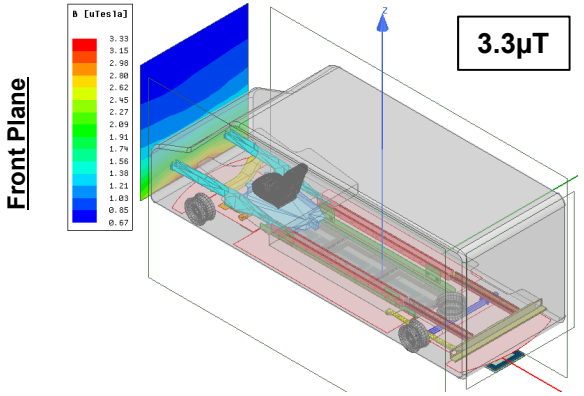

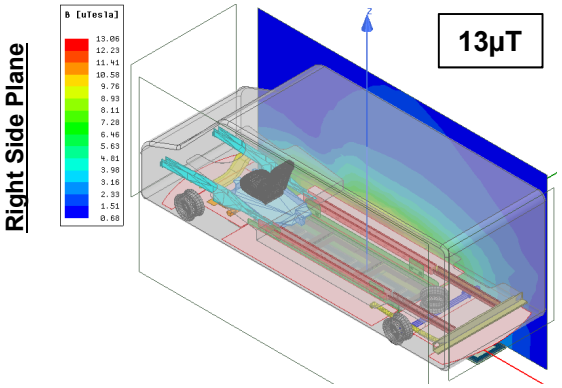

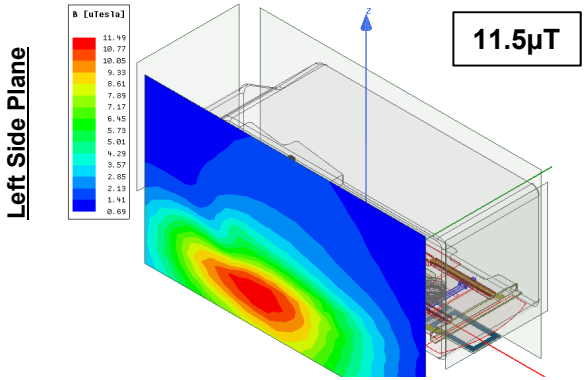

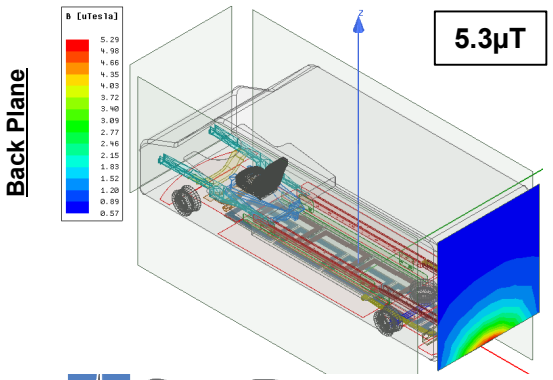

MAGNETIC COUPLER: POSSIBLE TOPOLOGIES

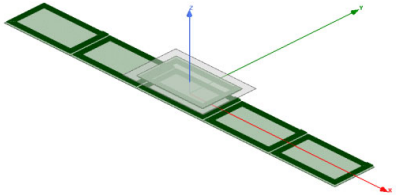

Multi-transmitters - rectangular

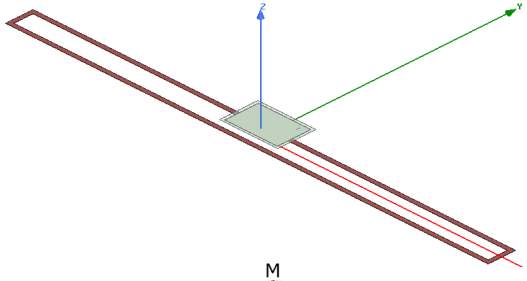

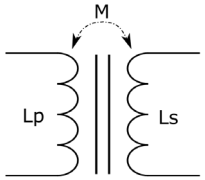

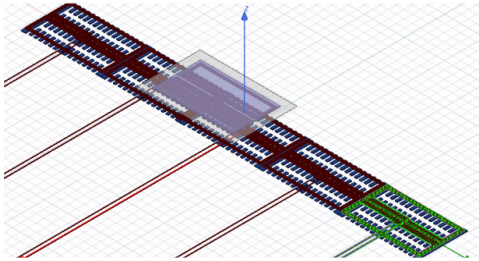

Multi-transmitters - square

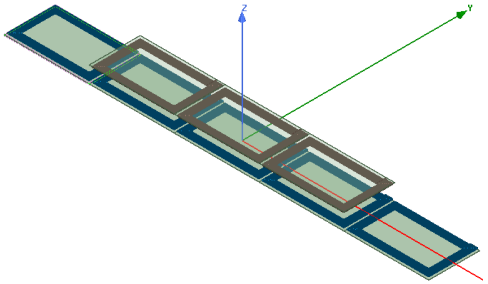

Multi-transmitters & multi-receivers - rectangular

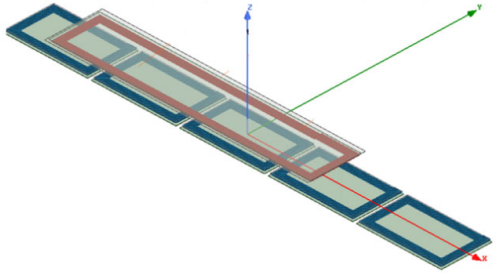

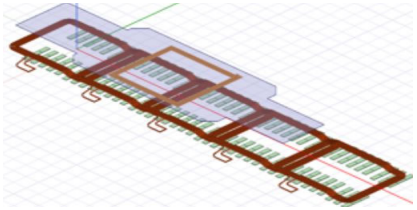

Multi-transmitters with overlap - square